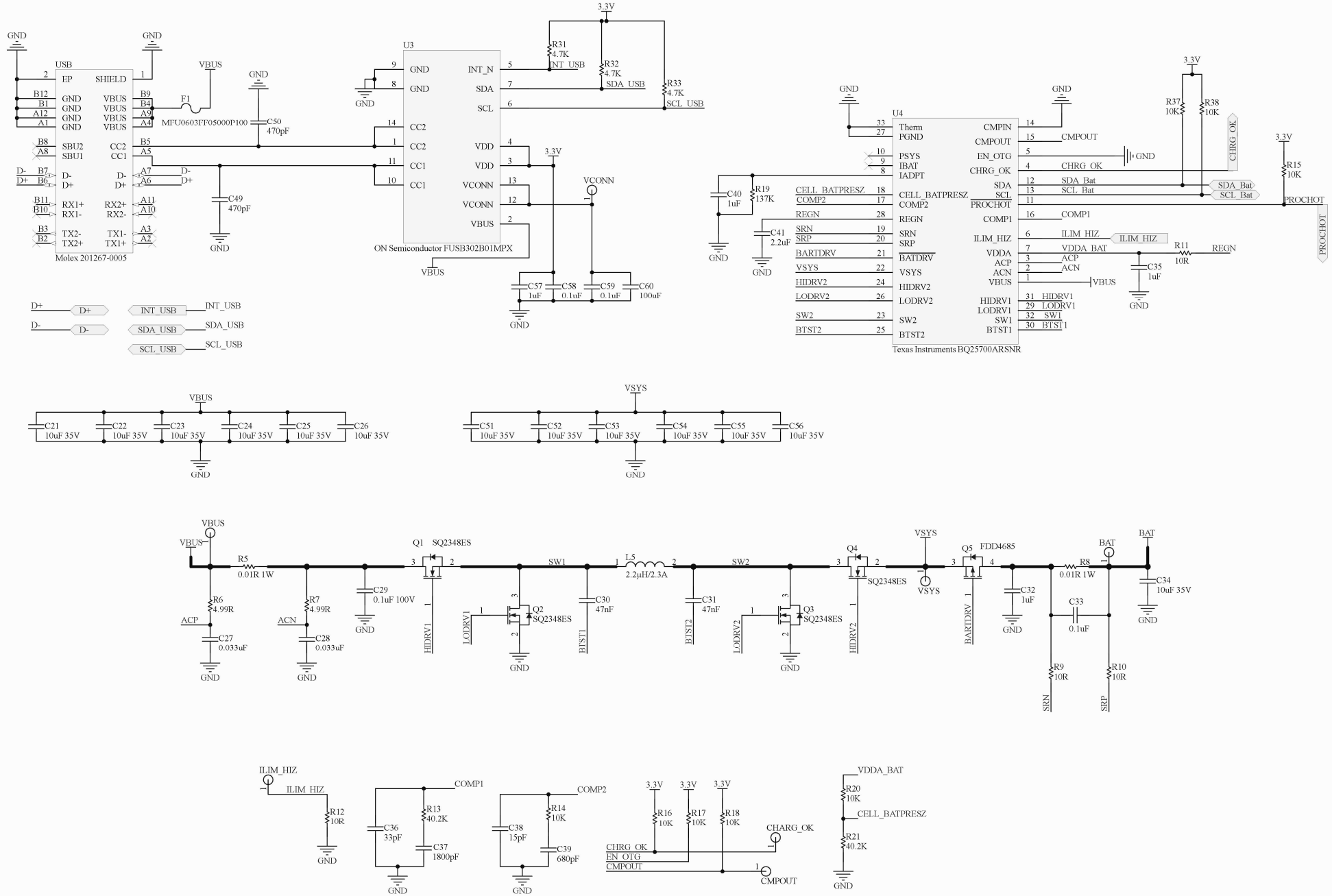

Title	SterilU Electronics		
Size A3	Number		Revision v1.0
Date: 9.04.2022		Sheet of	
File: USB-PD.SchDoc		Drawn By: Doğukan BARKAN	