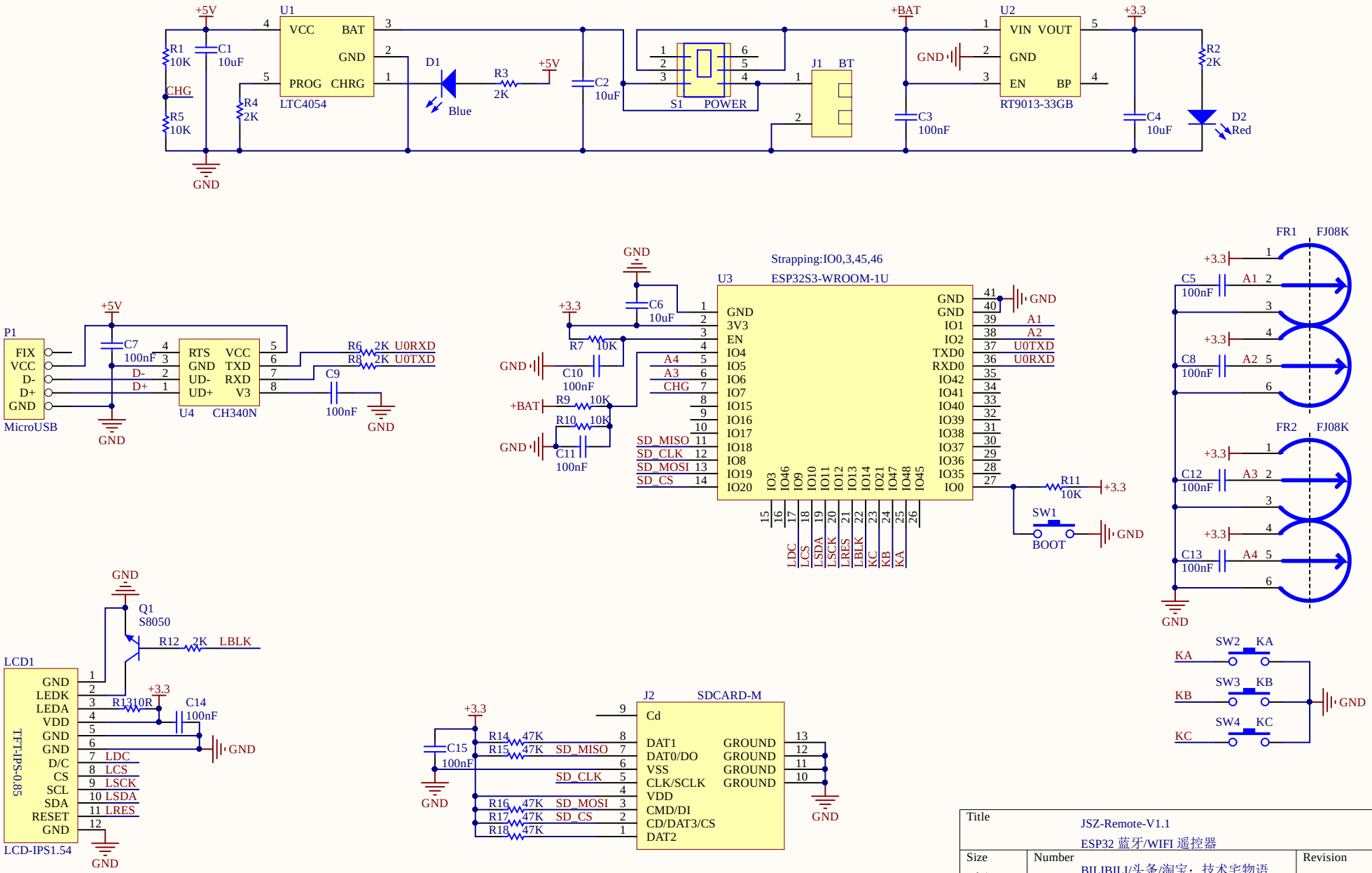

Title	JSZ-Remote-V1.1 ESP32 蓝牙/WIFI 遥控器	
Size A4	Number BILIBILI/头条/淘宝：技术宅物语	Revision
Date: 2023/2/13	Sheet of	
File: F:\我的项目\..\cameraRemoteControl_V1.1.SchDoc	Drawn By:	