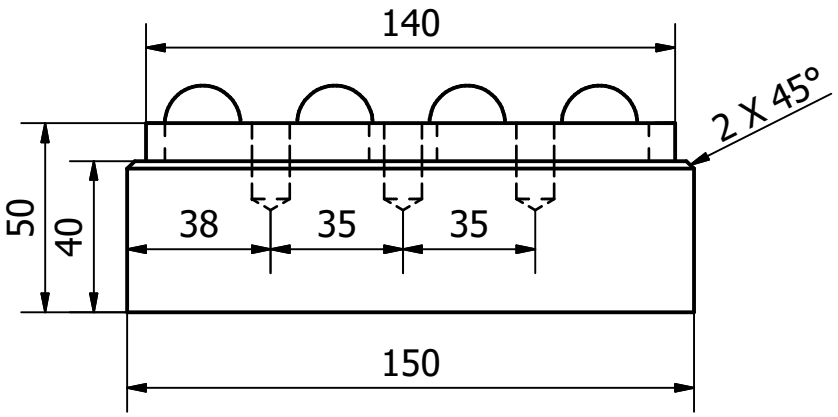

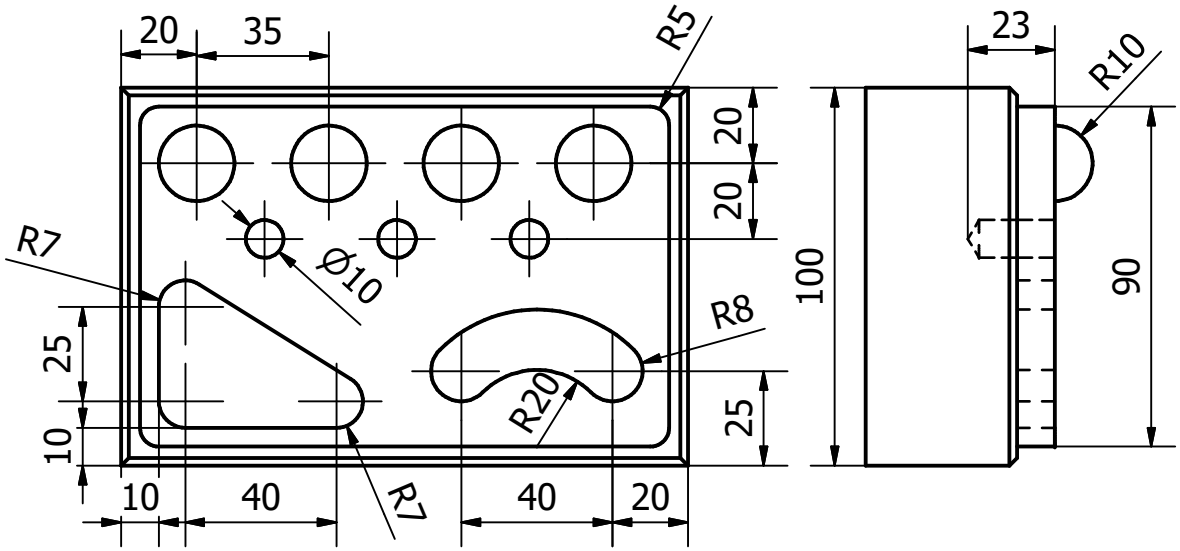

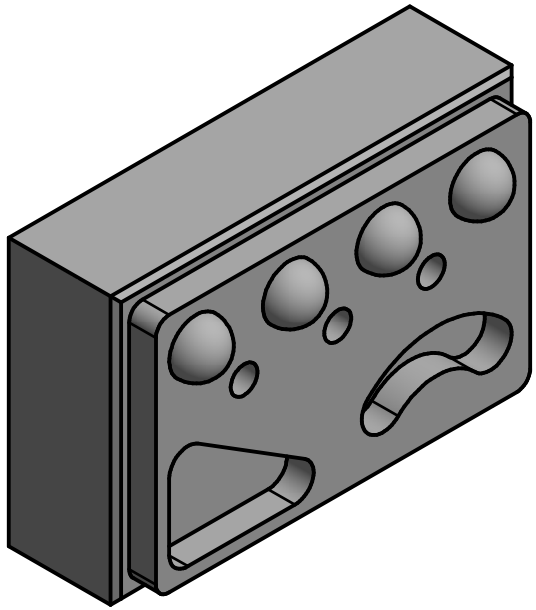

Obs: Prof. dos pocktes - 10 mm

Designed by	Checked by	Approved by	Date		Date	
Claudemir					14/05/2018	

Ex_esfera	Edition	Sheet 1 / 1