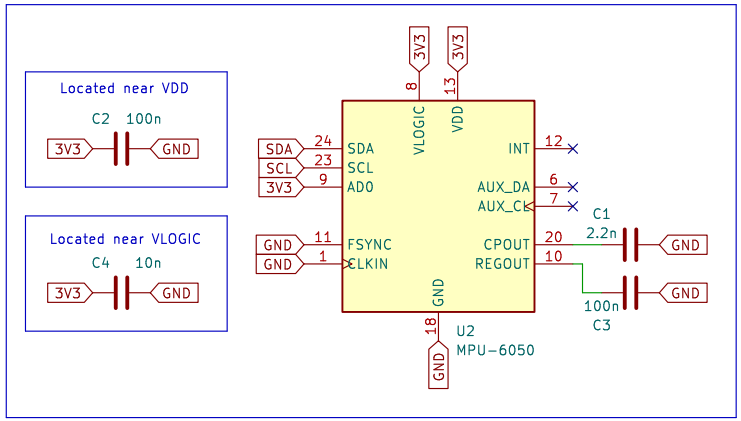

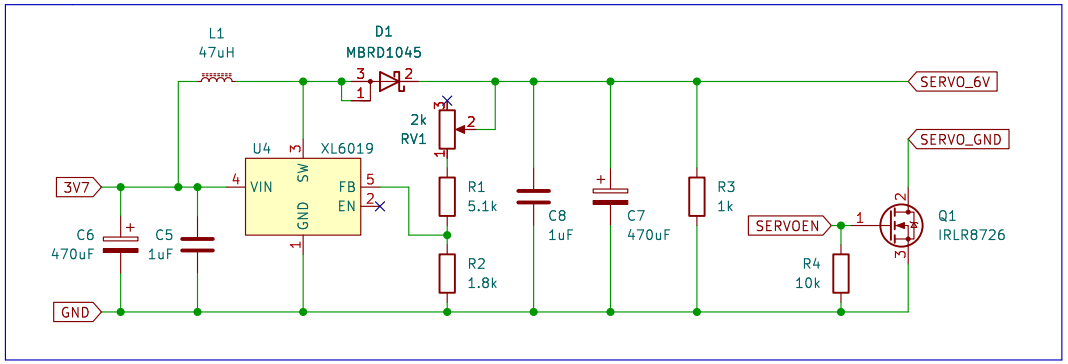

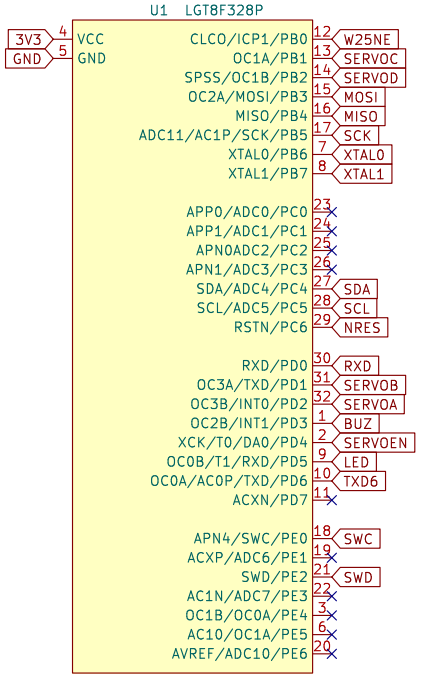

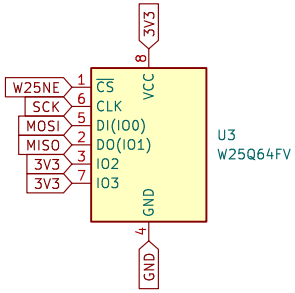

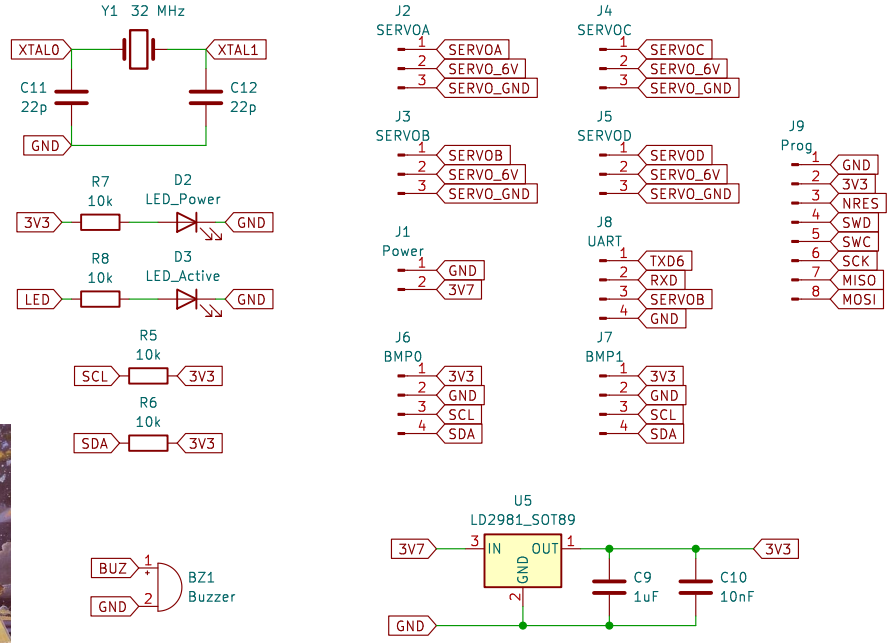

H1 MountingHole

H2 MountingHole

H3 MountingHole

H4 MountingHole

ОКБ "Ива" & Barsotion Koneenrakennus (KY)

Sheet: /

File: DeltaAnomalain.kicad_sch

Title: Barsotion GBK DeltaAnomalain

Size: A4	Date: 2024-05-12	**Rev: 1.1**
KiCad E.D.A. 8.0.1		Id: 1/1