ZONE	LTR	REVISION DESCRIPTION	DATE	APPROVED
	—			
	A	wf WAS Mf (CORRECTED ERROR); C15 WAS C13 (DUPLICATE); ADDED .1µf X 9 CAPS	6/12/84	
		RELEASED FOR PRODUCTION	6/18/84	

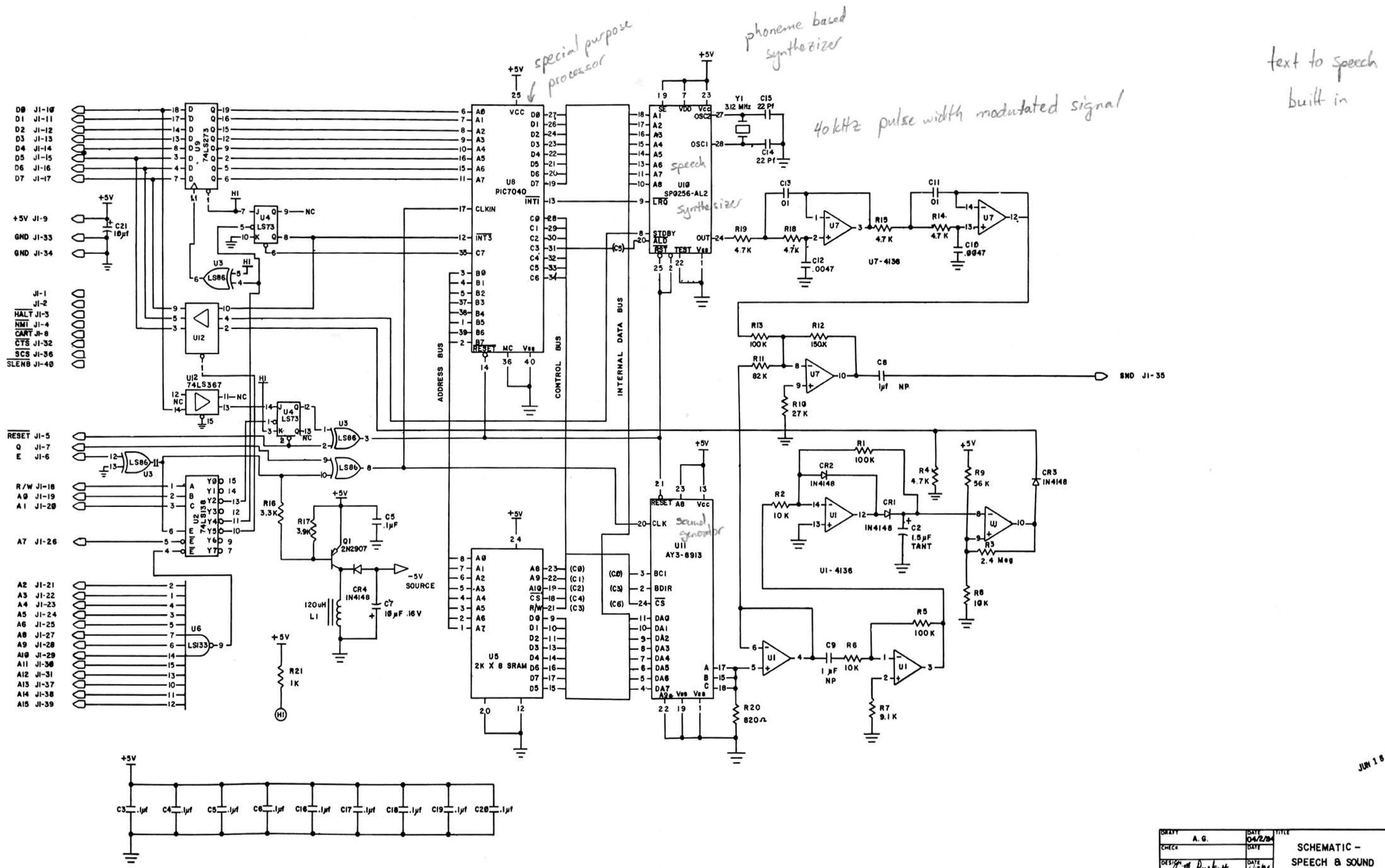

NOTES (UNLESS OTHERWISE SPECIFIED):

1. ALL RESISTANCE VALUES IN OHMS; K=1000 Ω

REF. DRILL PLAN 1700281

561

JUN 18 1984

DRAFT A. G.	DATE 04/2/84	TITLE SCHEMATIC – SPEECH & SOUND CARTRIDGE	
CHECK	DATE		
DESIGN J. M. Pickett	DATE 6/18/84		
APPD J. M. Pickett	DATE 6/18/84		
APPD	DATE 6-18-84		
tandy		DWG NO D-8000227	SIZE D
		SCALE NONE	SHEET 1 OF 1