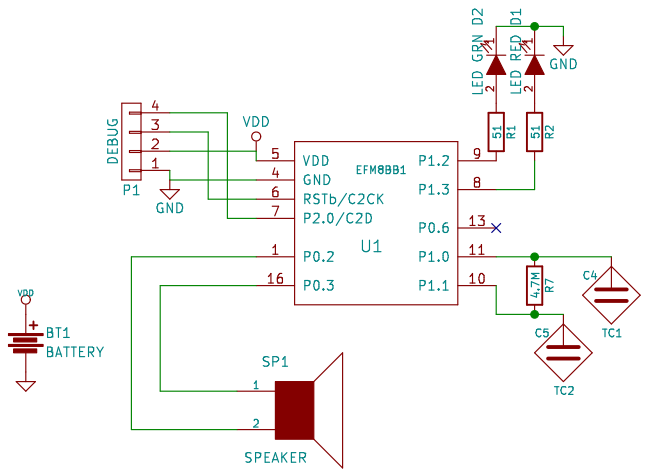

Copyright © 2015 Bart Massey
http://github.com/DesertLizard/LizardBoard
Open Hardware: See repo for license terms

Bart Massey

Sheet: /
File: lizard.sch

Title: Desert Lizard

Size: USLetter	Date: Sun 16 Aug 2015	**Rev: 1.1**
KiCad E.D.A. kicad (2015-08-06 BZR 6058)-product		Id: 1/1