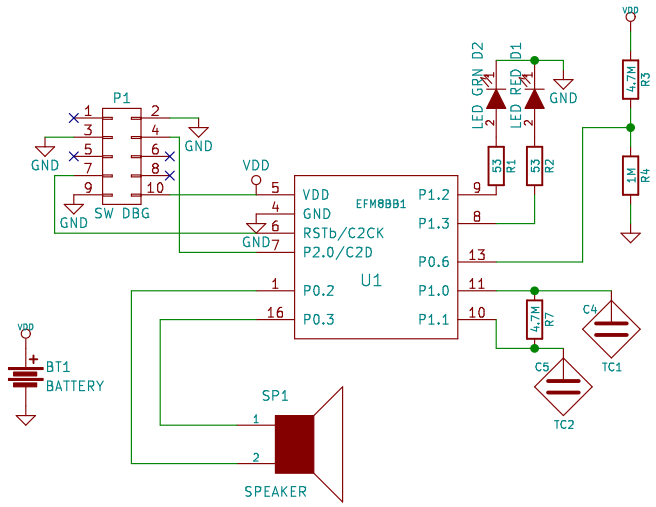

Copyright © 2015 Bart Massey
http://github.com/BartMassey/lizard.com
Open Hardware: See repo for license terms

Sheet: /
File: lizard.sch

Title: Desert Lizard Board

Size: USLetter	Date: Thu 11 Jun 2015	Rev: v1.0
KiCad E.D.A. kicad (2015-08-06 BZR 6058)-product		Id: 1/1