EXAM

1TE717 Digital Technologies and Electronics

2024 October

Aids:

- Mathematics and / or Physics handbook
- A small graphical calculator (e.g. TI-83 and similar)
- Two A4 papers (using two sides) with formulas/notes handwritten by you. Printouts from a tablet is allowed provided that the notes are entirely handwritten by you.

Any typeset material other than the above books are NOT allowed.

Observe: Do not treat more than one problem on each page.
Each step in your solutions must be motivated.
Lacking motivation will result in point deductions.
Write a clear answer to each question.
Stable the cover page to your answer sheet.

Exam Grade: Total number of points is 100. Grades are assigned according to the total number of points earned. Tentative thresholds are $50, 65, 80$ points for grades of $3, 4, 5$, respectively. Note that from which part (Part A or Part B) you have collected the points does not affect your grade.

Responsible: Ayça Özçelikkale.
To reach the instructor during the exam, contact proctors during 10:00-11:30.

Good Luck!

Part A
50pts

A.1

Consider the circuit in Fig. 1, where $R_1 = R_2 = R_3 = 20\,k\Omega$, $R_4 = 25\,k\Omega$, $R_5 = 5\,k\Omega$, $R_6 = 10\,k\Omega$, $R_8 = R_7 = 15\,k\Omega$, $R_9 = 30\,k\Omega$, $V_s = 9\,V$.
Determine the voltage across R_5. (10 pts)

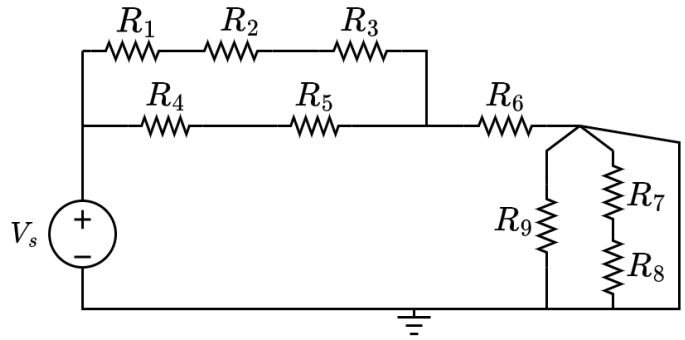

Figure 1: Circuit for Question A.1.

A.2

Consider the amplifier circuit in Fig. 2, where $R_1 = R_2 = R_3 = 10\,k\Omega$, $R_4 = 50\,k\Omega$, $V_{in} = 1\,V$.
Assume that the OpAmp is ideal and that the supply voltages are sufficiently large.
Using Ohm's and Kirchoff's laws as well as ideal OpAmp model, determine the current passing through R_4 (magnitude and direction). (10 pts)
Note: Merely identifying and writing down the correct formulas, without including the supporting derivations based on circuit analysis, will give no points.

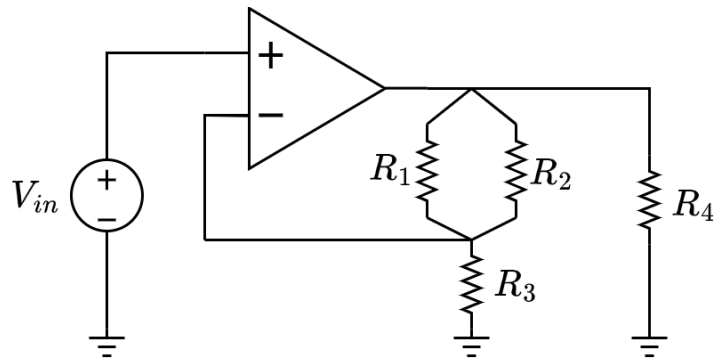

Figure 2: Circuit for Question A.2.

A.3

Consider the circuit in Fig. 3, where the Zener diode has the following characteristics: $V_Z = 5\,V$, $V_{ON} = 0.6\,V$. We have $R_1 = 100\Omega$, $R_2 = 100\Omega$.
Find V_o for the following V_{in} values: $-10\,V, -3\,V, 0\,V, 3\,V, 10\,V$. (5 × 2pts)

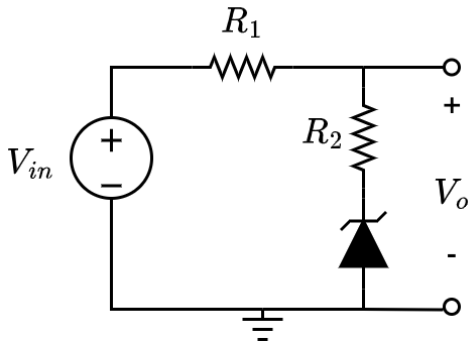

Figure 3: Circuit for Question A.3.

A.4

We have a Boolean function $f(x_3, x_2, x_1, x_0)$ with the following properties:

- The function is 1 for the following inputs: 1111, 0010, 0111, 1101, 0101.
- The inputs corresponding to the following terms are never encountered due to system properties: 0110, 1100, 1010, 1110.
- The function is 0 for the rest of the inputs.

In the above, the inputs are given according to the following ordering of the bits: $x_3x_2x_1x_0$.

(i) Find the Karnaugh map for $f(x_3, x_2, x_1, x_0)$. (5pts)

(ii) Design a combinatorial network that implements $f(x_3, x_2, x_1, x_0)$ using only **2-input NAND** gates. Draw the combinatorial circuit. (5pts)

A.5

Consider the filter in Fig. 4. This circuit has been simulated using different settings, and $v_c(t)$ curves shown in Figure 5 have been observed in steady-state. The maximum value of $v_c(t)$ and the label of the plot (A, B, C, D or E) are shown on top-left corner of each plot. The scaling of the time-axis is the same on all plots. The ranges of the voltage axis may be different across the plots.
We have $R = 200\,\Omega$. The plots are obtained using these settings:

- Setting 1: $v_{in}(t) = 5$, $C = 1\mu F$
- Setting 2: $v_{in}(t) = 5\sin(160\pi t)$, $C = 1\mu F$
- Setting 3: $v_{in}(t) = 5\sin(160\pi t)$, $C = 10\mu F$
- Setting 4: $v_{in}(t) = 5\sin(400\pi t)$, $C = 1\mu F$
- Setting 5: $v_{in}(t) = 5\sin(400\pi t)$, $C = 10\mu F$

Determine which plot (A, B, C, D, E) corresponds to which setting (1, 2, 3, 4, 5). (5 × 2 pts)
*Hint: You do **not** need to make detailed calculations. It is possible to answer the question by comparing the options with each other.*

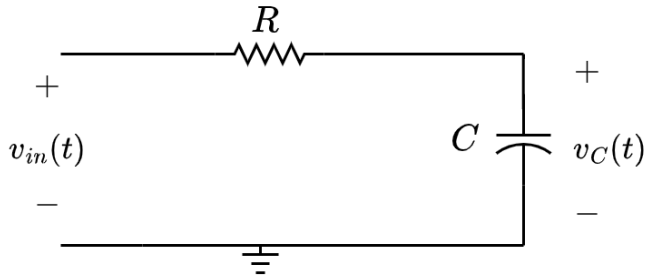

Figure 4: Circuit for Question A.5.

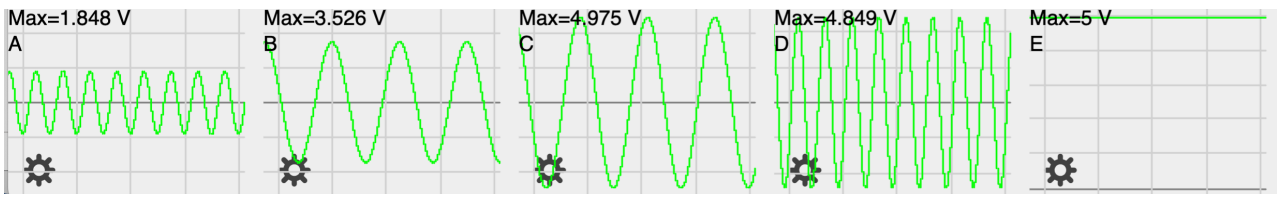

Figure 5: Plots for Question A.5.

Part B

50pts

B.1

Consider the circuit in Fig. 6. We have $R_1 = 12\,\Omega$, $R_2 = R_3 = R_4 = 6\,\Omega$, $V_s = 0.6, V$, $I_A = 0.1$ A, $I_B = 1.9$ A.
Determine the voltage across R_1. (15 pts)

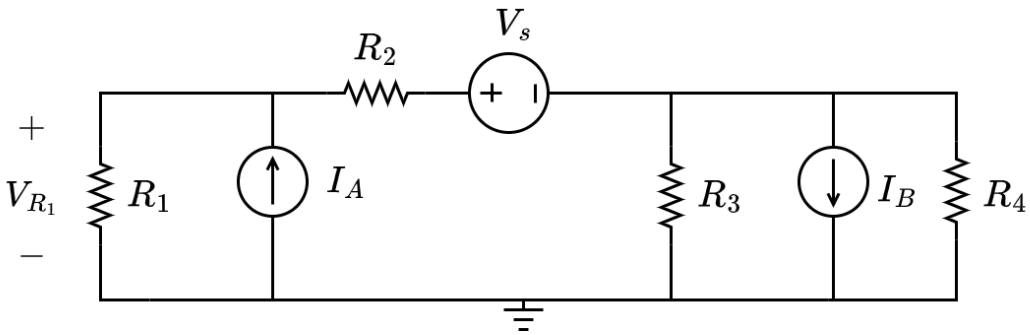

Figure 6: Circuit for Question B.1.

B.2

This question is about designing a sequential machine that detects one of the desired sequences within a stream of bits x_t. The circuit normally gives $y = 0$ as the output, until one of the following two desired sequences are detected: 0111 or 1111 . The order of the bits in the desired sequences uses the following convention: In $A\,B\,C\,D$, D arrives first, then C, then B, then A.
Every time that one of the desired sequences is detected, the output y should be set to 1 for one clock cycle, and then return to zero when a new input bit x_t is read and we continue to detect the desired sequences in a **non-overlapping** manner with the previous sequence.

(i) Perform the first steps of the design of the sequential network: i) derive the state-diagram, ii) choose the state-coding, and iii) write the truth tables determining the behavior of the sequential network and its outputs. (12 pts)

(ii) Indicate how many D flip-flops would be needed to implement your circuit. Motivate your answer. (3 pts)

*Note: You do **not** need to derive the minimal SP-form Boolean expressions, nor to draw the final circuit diagrams with gates and flip-flops.*

B.3

Consider the filter in Fig. 7. Suppose that $v_{in}(t)$ is a sinusoidal voltage signal with $v_{in}(t) = 10\sin(\omega t)$ where the unit is Volts. Here, $\omega = 2000$ rad/s. Consider the following values: $R_1 = 100\Omega$, $R_2 = 250\Omega$, and $L_1 = L_2 = 10\,mH$, $C = 4\,\mu F$. Find the voltage across R_1, i.e. $v_{R_1}(t)$. (10pts)

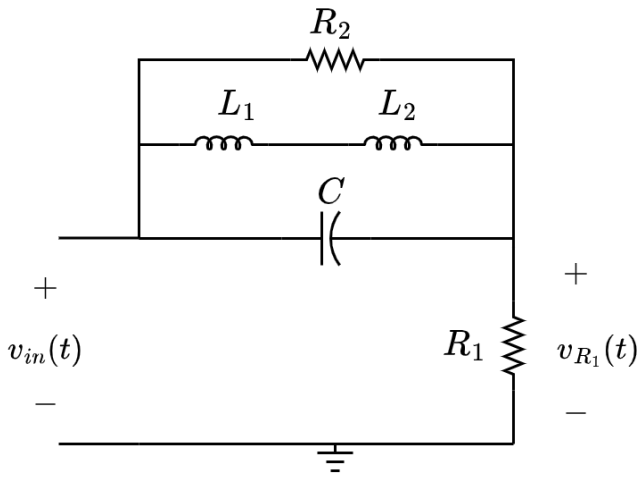

Figure 7: Circuit for Question B.3.

B.4

Consider the circuit in Fig. 8, where the bipolar transistor has the following characteristics: $\beta = 50$, $V_{CE,SAT} = 0.2\,V$, $V_{BE,ON} = 0.7\,V$. We have $R_1 = 10k\Omega$, $R_2 = 500\Omega$, $R_3 = 500\Omega$, $V_{S_1} = 3\,V$ and $V_{S_2} = 10\,V$.
Find the current through R_2 (magnitude and direction). (10pts)

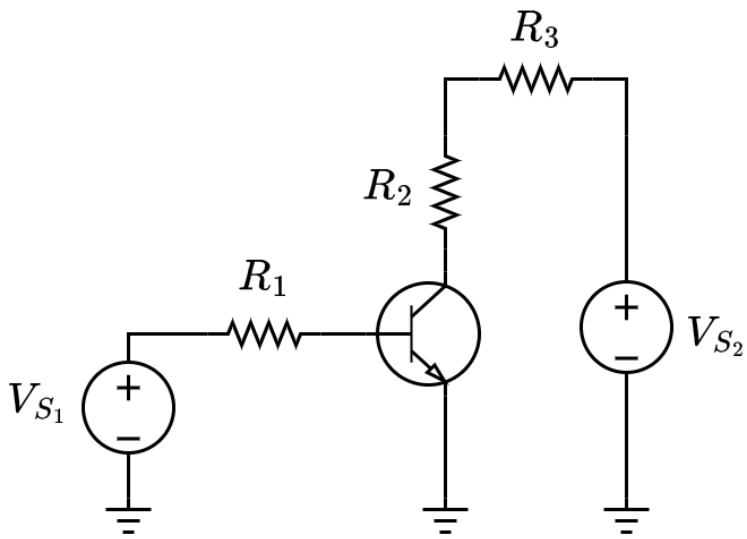

Figure 8: Circuit for Question B.4.