A1

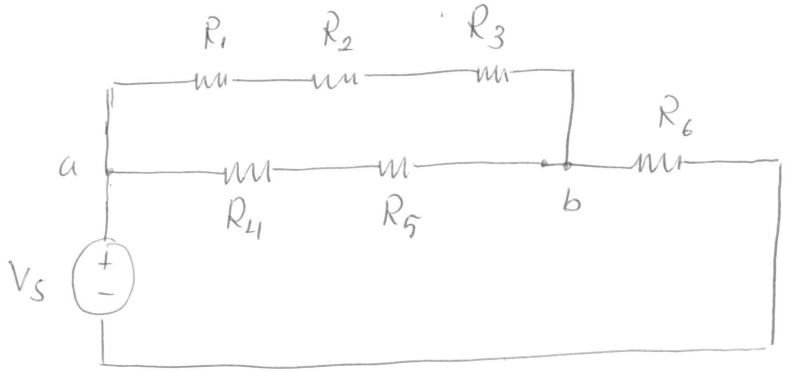

Equivalent resistance between a and b

$$(R_1 + R_2 + R_3) \parallel (R_4 + R_5) = 60k\Omega \parallel 30k\Omega$$

$$\Rightarrow \quad R_{equ} = \frac{60 \times 30}{60+30} k\Omega = 20k\Omega$$

Hence,

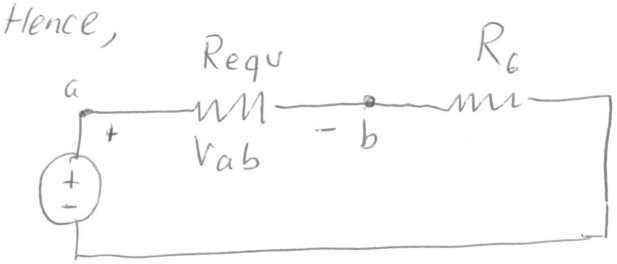

$$V_{ab} = \frac{R_{equ}}{R_{equ} + R_6} \cdot V_s$$

$$= \frac{20}{20+10} \cdot 9 = 6V$$

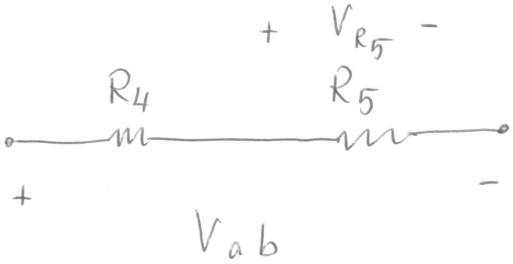

$$V_{R_5} = \frac{R_5}{R_4 + R_5} \cdot V_{ab}$$

$$= \frac{5}{25+5} \cdot \overset{6}{V_{ab}} = 1V$$

A2

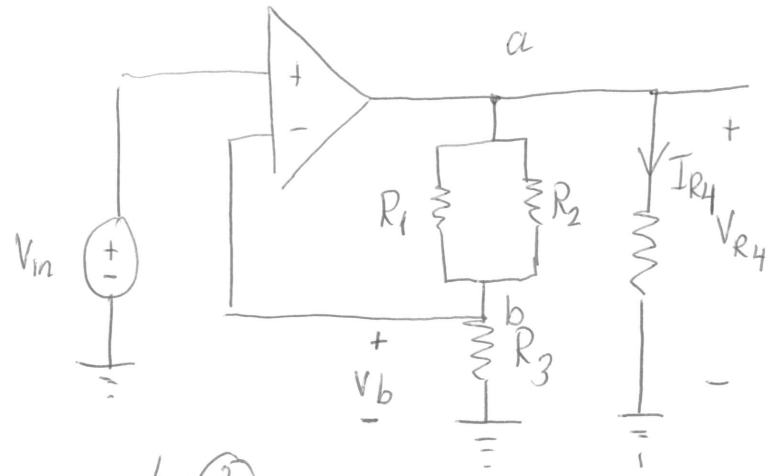

Ideal op-amp

$i_+ = i_- = 0$ (1)

$V_+ = V_-$ (2)

(due to negative feedback)

by (2)

$V_b = V_- = V_+ = V_{in}$ $\Rightarrow$ $V_b = V_{in}$ (3)

R_{equ} between a and b : $R_{equ} = R_1 \| R_2 = 5k\Omega$

By (1)

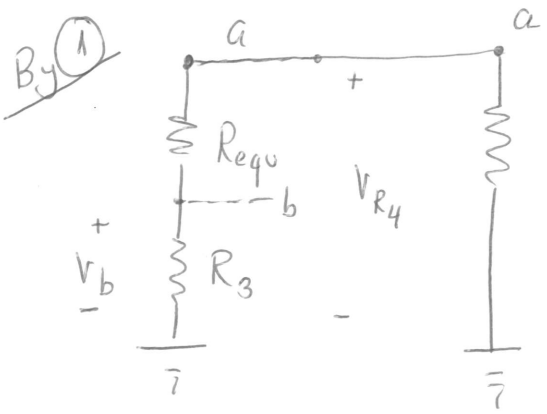

$$V_b = \frac{R_3}{R_3 + R_{equ}} \cdot V_{R4} \quad (4)$$

(3) and (4)

$$V_{R4} = \frac{R_3 + R_{equ}}{R_3} \cdot V_{in}$$

$$= \frac{10+5}{10} \cdot \underbrace{V_{in}}_{1V}$$

$$V_{R4} = \frac{3}{2} \cdot V$$

$$= 1.5\,V \quad \Rightarrow \quad I_{R4} = \frac{1.5}{50k}$$

direction: $\downarrow$ $= 0.03\,mA$

A3

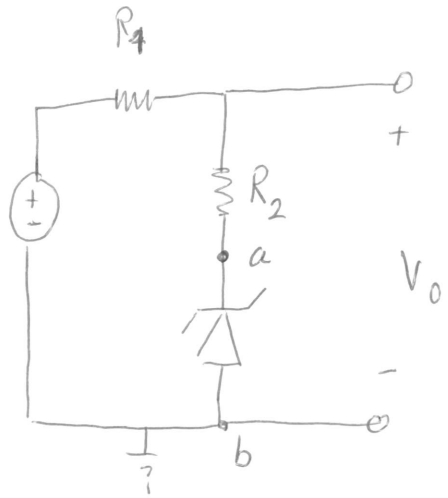

Equivalent circuit between a and b

(*) If the diode is forward-biased (FB)

or reverse biased (RB)

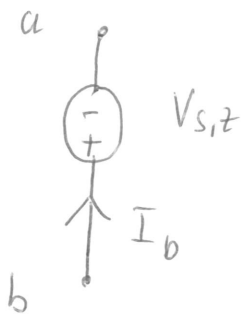

If FB

$V_{s,z} = 0.6\,V$

$I_D > 0$

If RB

$V_{s,z} = -5\,V$

$I_b < 0.$

(*) If neither FB nor RB, the diode acts as an open circuit. (OC)

If FB or RB

$$I_b = -\frac{V_{in} + V_{s,z}}{R_1 + R_2}$$

$$V_{out} = -V_{s,z} - I_D \times R_2 = \frac{V_{in} - V_{s,z}}{2}$$

If FB, $I_D > 0$, Hence $-\frac{V_{in} + 0.6}{R_1 + R_2} > 0 \Rightarrow V_{in} < -0.6$ (1)

RB, $I_D < 0$. Hence, $-\frac{V_{in} - 5}{R_1 + R_2} < 0 \Rightarrow V_{in} > 5$ (2)

If FB, $V_{out} = \frac{V_{in} - 0.6}{2}$ (3) If RB, $V_{out} = \frac{V_{in} + 5}{2}$ (4)

If OC, $V_{out} = V_{in}$. (5)

Hence, by (1), (2), (3), (4) and (5) $\Rightarrow$ (unit: Volts)

V_{in}	-10	-3	0	3	10
V_{out}	-5.3	-1.8	0	3	7.5

A4

i)

x_3x_2 \ x_1x_0	00	01	11	10
00	0	0	0	1
01	0	1	1	X
11	X	1	1	X
10	0	0	0	X

ii) $f = x_0 x_2 + x_1 x_0'$

$= \left((x_0 x_2)' \cdot (x_1 x_0')' \right)'$

$= \text{NAND}\left(\text{NAND}(x_0, x_2), \text{NAND}(x_1, \underbrace{x_0'}_{\text{NAND}(x_0, x_0)}) \right)$

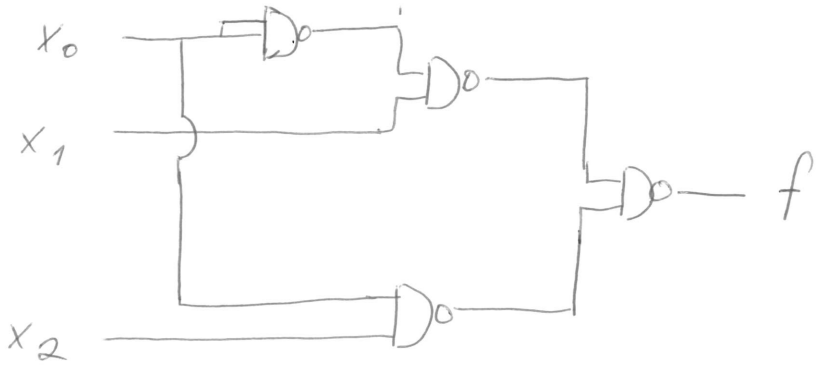

A5) Looking at frequencies:

(1) $\begin{cases} E = \text{setting } 1 \text{ , (DC input} \rightarrow \text{DC output)} \\ A, D \Rightarrow \omega = 400\Omega \text{ (Setting 4 or 5)} \\ B, C \Rightarrow \omega = 160\Omega \text{ (" 2 or 3)} \end{cases}$

<u>In phasor notation</u>

$$V_c = \frac{Z_c}{Z_R + Z_c} \cdot V_{in} \qquad \text{where } Z_R = R, \quad Z_C = \frac{1}{j\omega C}$$

$$V_c = \frac{1}{1 + j\omega CR} \cdot V_{in}$$

As C increases, $|V_c|$ decreases $\Rightarrow$ peak amplitude of $V_c(t)$ decreases. (2)

By (1) and (2)

A $\Rightarrow$ 5

B $\Rightarrow$ 3

C $\Rightarrow$ 2

D $\Rightarrow$ 4

E $\Rightarrow$ 1

31

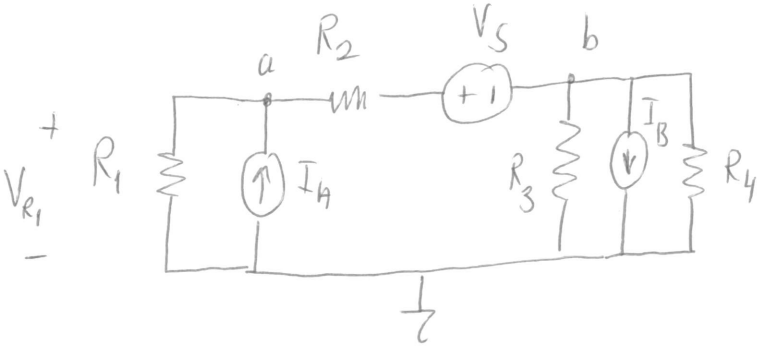

KCL at node a $\quad \dfrac{V_a}{R_1} + \dfrac{V_a - V_S - V_b}{R_2} = I_A$

$$\frac{V_b}{R_3} + \frac{V_b}{R_4} + \frac{V_b - V_a + V_S}{R_2} = -I_B$$

$$\left(\frac{1}{R_1} + \frac{1}{R_2}\right) V_a - \frac{1}{R_2} V_b = I_A + \frac{V_S}{R_2}$$

$$\Rightarrow \quad 0.25\, V_a - 0.1667\, V_b = 0.2 \qquad (1)$$

$$-\frac{1}{R_2} V_a + \left(\frac{1}{R_3} + \frac{1}{R_4} + \frac{1}{R_2}\right) V_b = -I_B - \frac{V_S}{R_2}$$

$$\Rightarrow -0.1667\, V_a + 0.5\, V_b = -2 \qquad (2)$$

By (1) and (2) $\quad V_a = -2.4\,V \quad \Rightarrow \quad \underline{V_{R_1} = -2.4\,V}$

$V_b = -4.8\,V$

B2

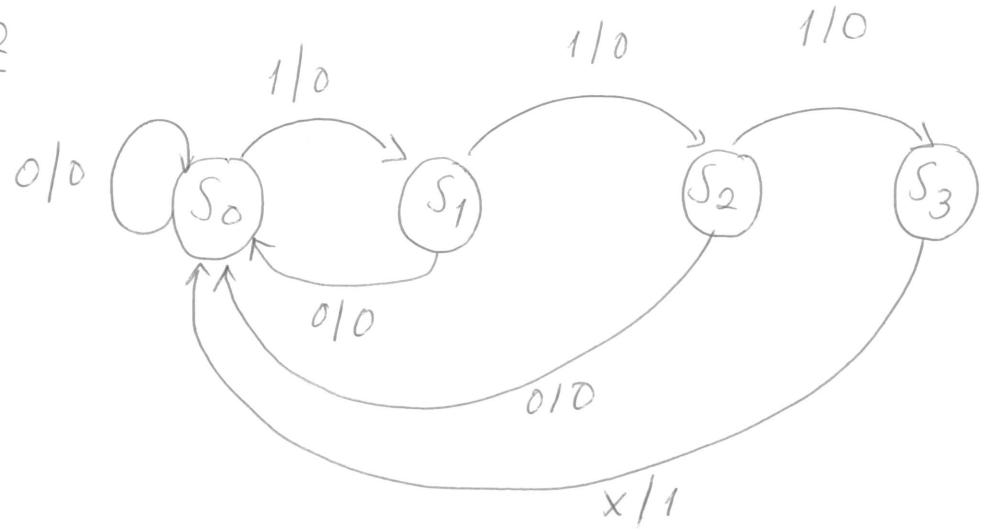

Initial State: S_0

Notation: input/output

State coding: binary

	$S_{current}$	x	S_{next}	y
S_0	00	0	00	0
	00	1	01	0
S_1	01	0	00	0
	01	1	10	0
S_2	10	0	00	0
	10	1	11	0
S_3	11	0	00	1
	11	1	00	1

4 states are encoded with binary coding
$\Rightarrow$ 2 bits of memory are required $\Rightarrow$ 2 D flip-flops.

(This is one of the possible answers. Other designs are possible.)

B3

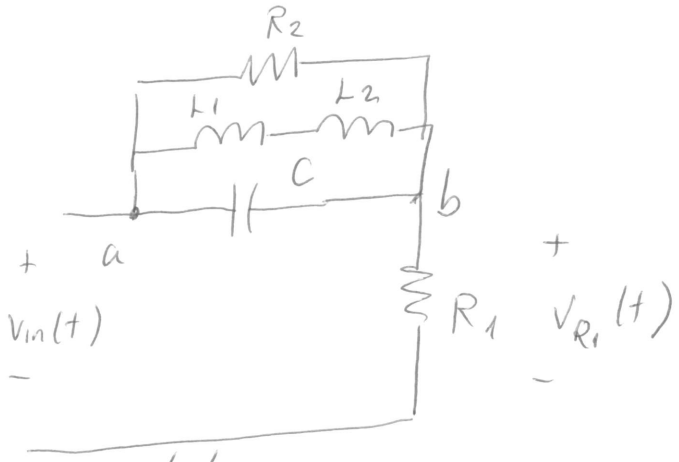

Between pts a and b

$$Z_{equ} = \underset{250}{Z_{R_2}} \,\|\, \underset{40j}{(Z_{L_1}+Z_{L_2})} \,\|\, \underset{-125j}{Z_C} \Rightarrow Z_{equ} = \left(\underset{4}{\frac{1}{250}} + \underset{25}{\frac{1}{40j}} - \underset{8}{\frac{1}{125j}}\right)^{-1}$$

$$= \left(\frac{4-17j}{1000}\right)^{-1}$$

$$Z_{equ} \cong 13.11 + 55.73j$$

In phasor notation

$$V_{R_1} = \frac{R_1}{Z_{equ}+R_1} \cdot V_{in}$$

$$\cong \frac{100}{113.11+55.73j} \cdot V_{in}$$

$$V_{R_1} = (0.7113 - 0.3505j) \cdot V_{in}$$

$$\cong 0.79 \angle -26^\circ \; V_{in}$$

$\hookrightarrow -0.45$ rad

phasor domain expression

$$V_{R_1}(t) \cong 7.9 \cdot \sin(2000t - 26^\circ).$$

B4

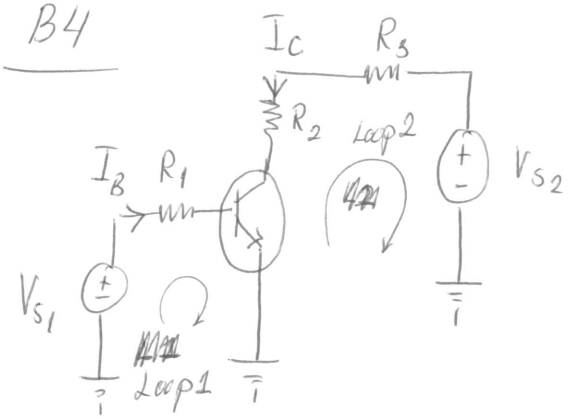

KVL Loop 1

$$V_{S1} = I_B \cdot R_1 + V_{BE} \quad (1)$$

KVL Loop 2

$$V_{S2} = I_C (R_2 + R_3) + V_{CE} \quad (2)$$

Assume BJT is active.

$$(1) \Rightarrow V_{S1} = I_B \cdot R_1 + V_{BE,ON} \Rightarrow I_B = \frac{3-0.7}{10k\Omega} = 0.23\,mA \quad (1')$$

$$I_C = \beta I_B \Rightarrow (2): V_{CE} = V_{S2} - 0.23 \times 50 \,(1000)$$

$$V_{CE} = 10 - 11.5$$

$$V_{CE} < V_{CE-SAT}$$

The assumption BJT is active is wrong!

Assume BJT is in saturation mode: (1') is the same.

(2) becomes $V_{S2} = I_C (10^3) + 0.2$

10V

$$I_C = 9.8/10^3 \Rightarrow 9.8\,mA$$

Check

$$I_B \times \beta = 2.3 \times 50 = 11.5\,mA \qquad I_B \times \beta > I_C \checkmark$$

(if the saturation assumption is correct)

$$I_C = 9.8\,mA$$

$$I_B > 0, \quad I_C > 0 \checkmark$$

$$I_{R_2} = I_C = 9.8\,mA.$$