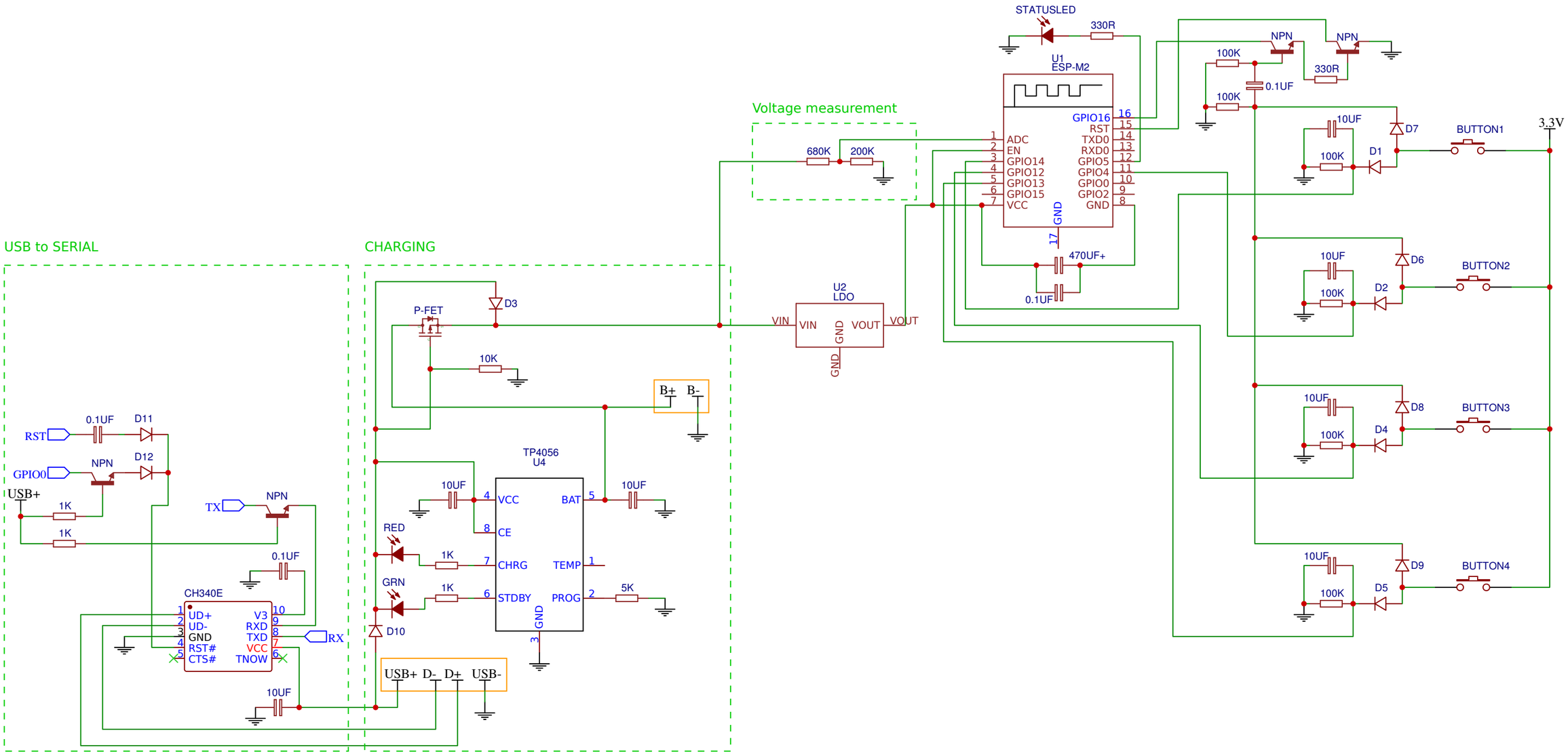

TITLE: Hugh the Switch	REV: 2.3
Date: 2019-4-15	Sheet: 1/1
EasyEDA V5.8.20	Drawn By: mcer12