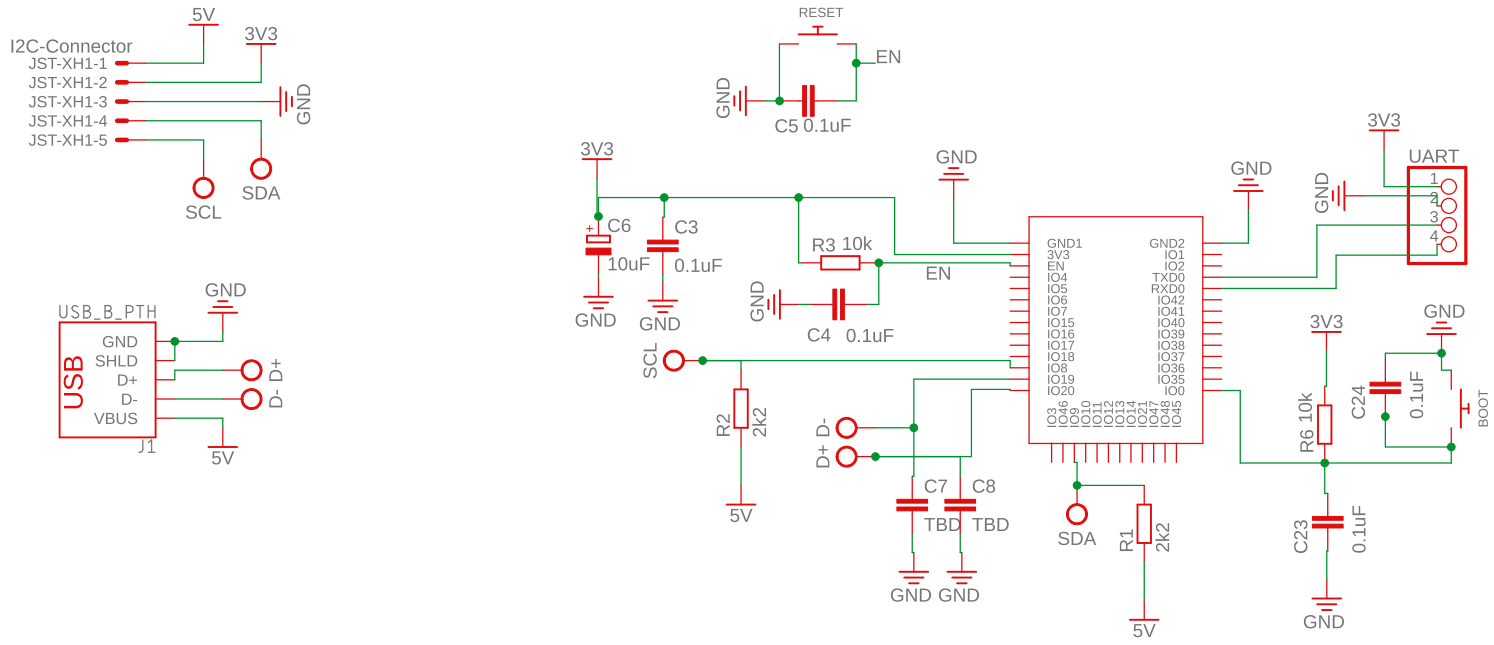

TITLE: ESP32S3 Base Schematic

Document Number: 1

REV: 1

Date: 07/03/2024 08:57

Sheet: 1/1