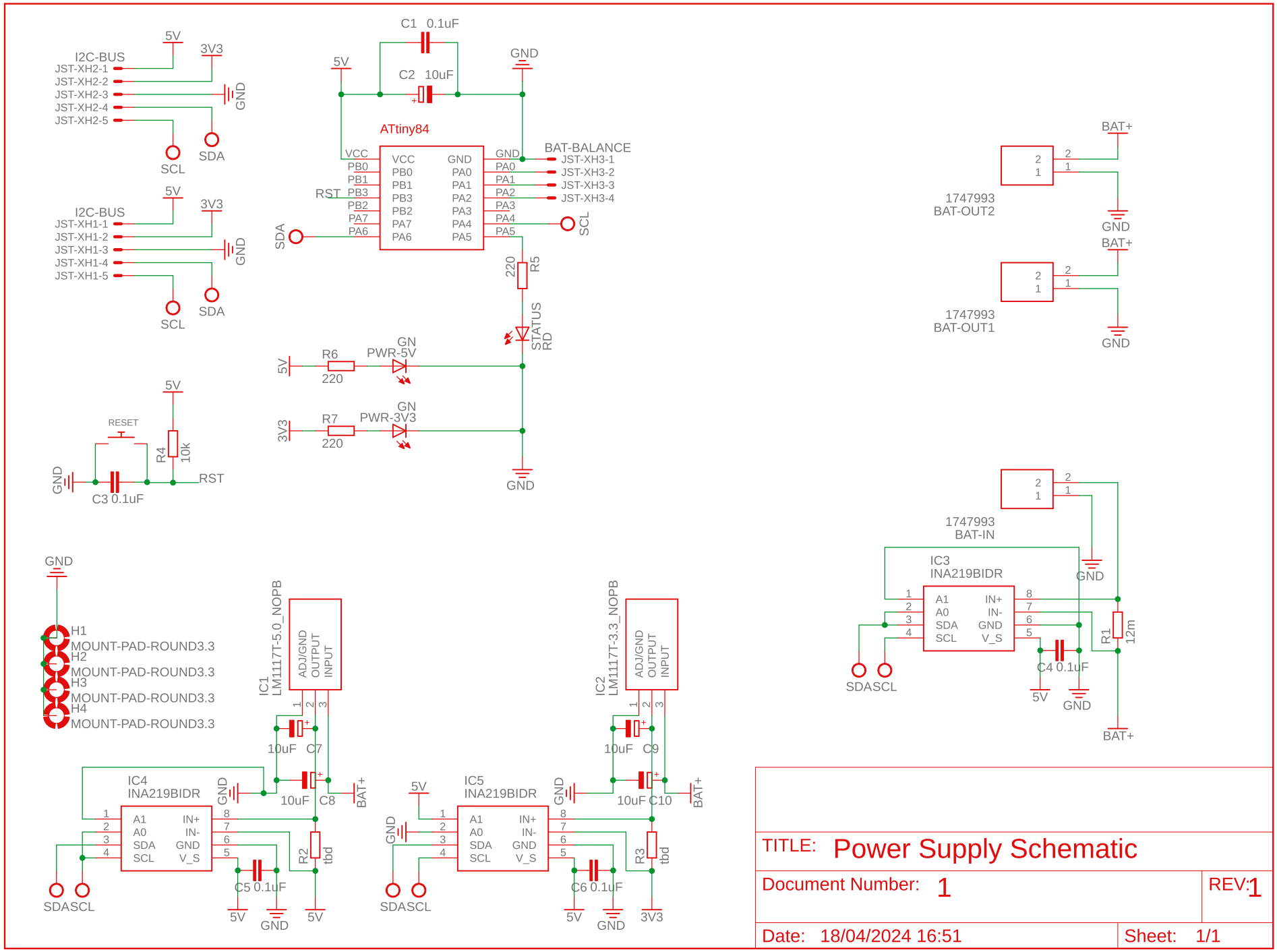

TITLE: Power Supply Schematic

Document Number: 1

REV: 1

Date: 18/04/2024 16:51

Sheet: 1/1