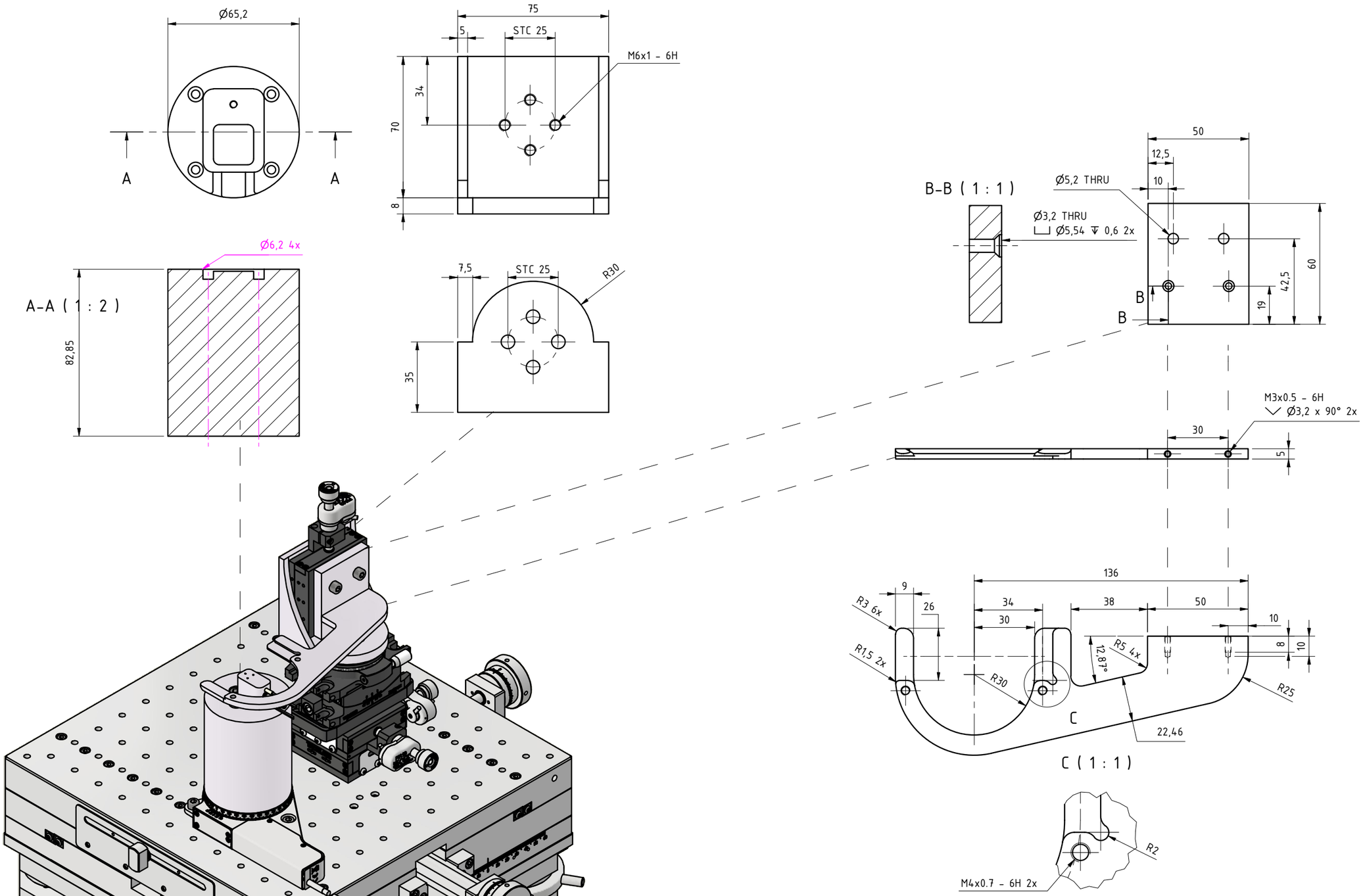


| | | | | | |
|---|---|---|---|---|---|
| **Dimensional tolerancing:** NEN-ISO 2768-fh | | **Geometrical tolerancing:** NEN-ISO 1101 | **Surface roughness:** NEN-EN-ISO 1302 | **Material:** | |
| **Designed by:** R. Stoelwinder | **Design status:** WorkInProgress | **Release date:** 03/11/2022 | **Group:** QMO - Bhattacharyya | 3th angle | **LEIDEN UNIVERSITY PROPRIETARY** THIS DOCUMENT CONTAINS CONFIDENTIAL PROPRIETARY INFORMATION THAT IS PROPERTY OF LEIDEN UNIVERSITY DO NOT DISCLOSE TO OR DUPLICATE FOR OTHERS EXCEPT AS AUTHORIZED BY LEIDEN UNIVERSITY |
| Leiden university — Leiden Institute of Physics, Fine Mechanical Department, Niels Bohrweg 2, 2333 CA Leiden, Netherlands — FMD | | **Partname:** Assembly stacking setup suppliersparts | | **Qty:** 1 | |
| | | **Project:** | | **Scale:** 1 : 3 | **Units:** mm — A3 — **Sheet:** 2 /2 |
| | | **Filepath:** R:\2008 LION projecten\QMO-Bhattacharyya Samanth\2022-RS-Stackin setup\Design Files\CAD from suppliers (stages)\Assembly stacking setup suppliersparts.iam | | | |