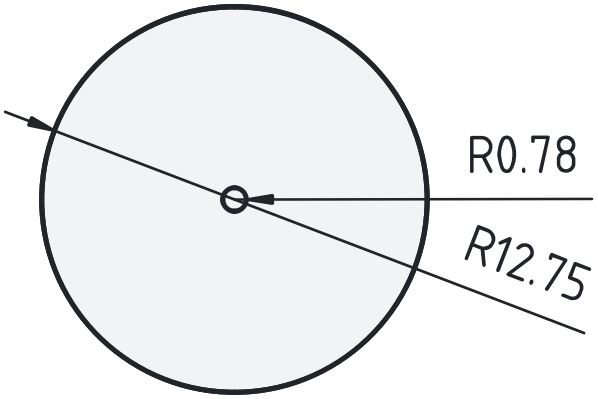

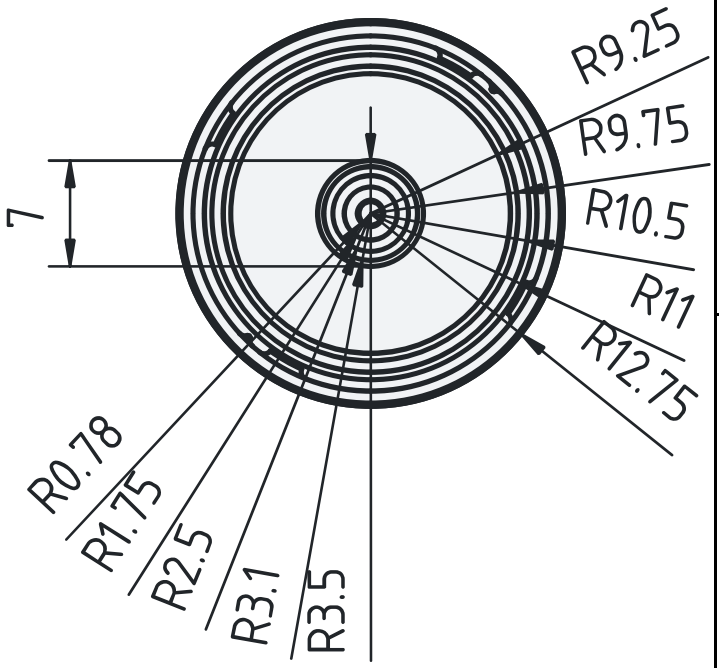

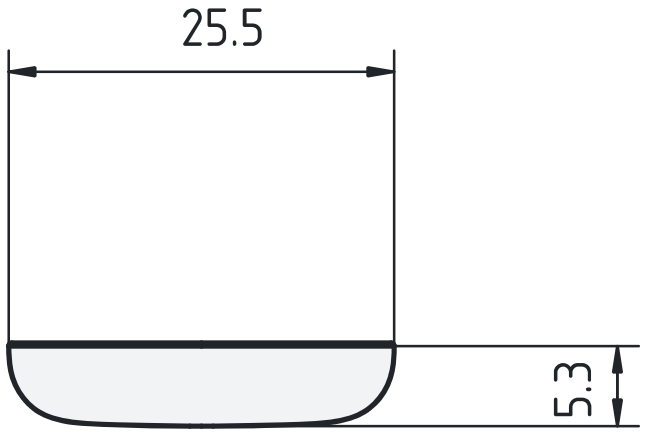

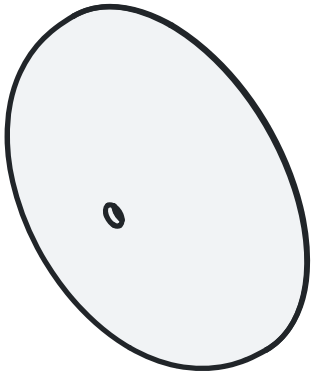

DESIGNED BY:		03-OMI-V3-4_CASE-B_16	
DATE: 12-06-2025			
SIZE A4			
SCALE 1 : 1	WEIGHT (kg)	DRAWING NUMBER	SHEET

This drawing is our property; it can't be reproduced or communicated without our written consent.

G	_
F	_
E	_
D	_
C	_
B	_
A	_

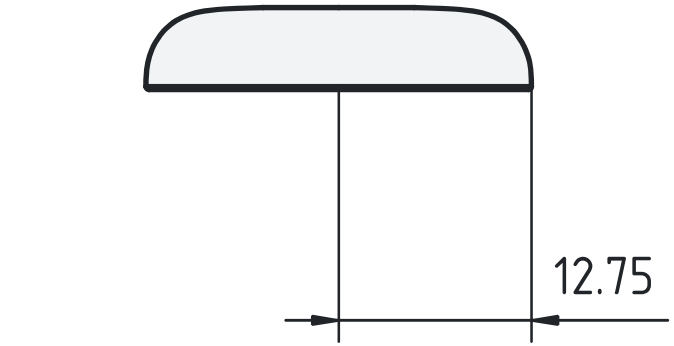

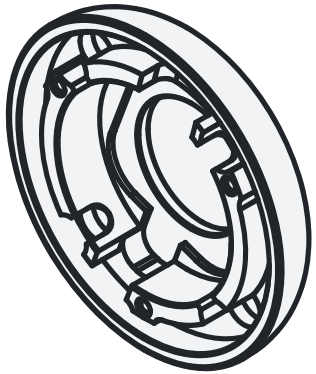

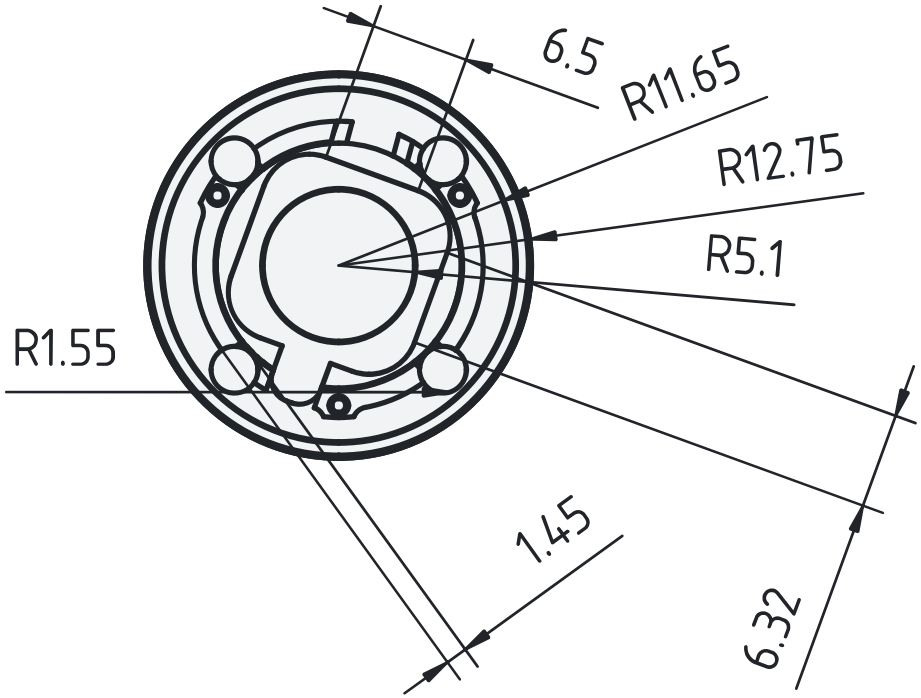

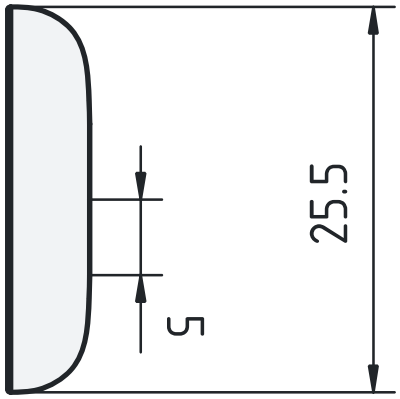

DESIGNED BY:		03-OMI-V3-3_CASE-A_25	
DATE: 12-06-2025			
SIZE A4			
SCALE 1 : 1	WEIGHT (kg)	DRAWING NUMBER	SHEET

This drawing is our property; it can't be reproduced or communicated without our written consent.

G	_
F	_
E	_
D	_
C	_
B	_
A	_

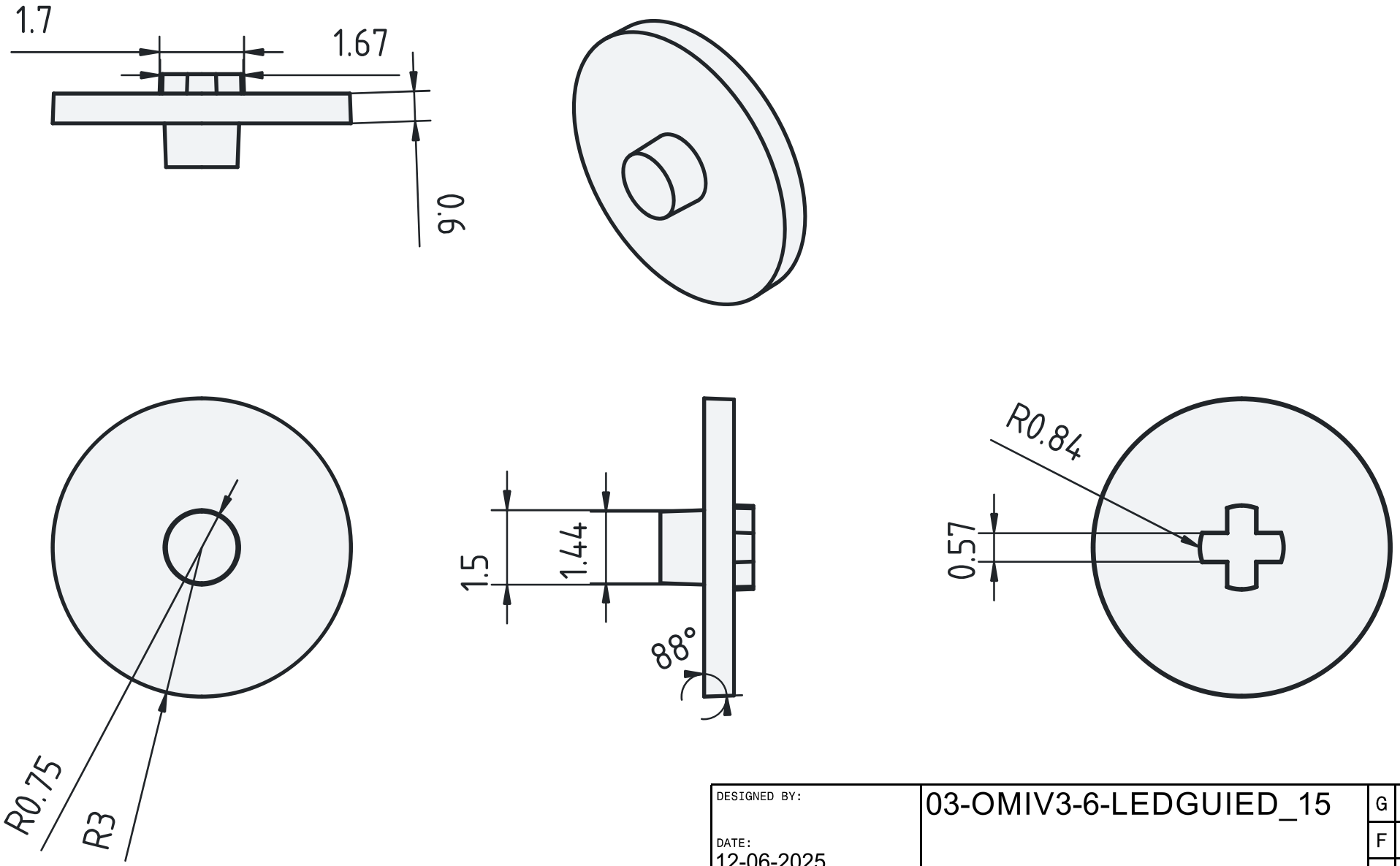

DESIGNED BY:		03-OMIV3-6-LEDGUIED_15		
DATE: 12-06-2025				
SIZE A4				
SCALE 1 : 1	WEIGHT (kg)	DRAWING NUMBER	SHEET	

This drawing is our property; it can't be reproduced or communicated without our written consent.

G	_
F	_
E	_
D	_
C	_
B	_
A	_

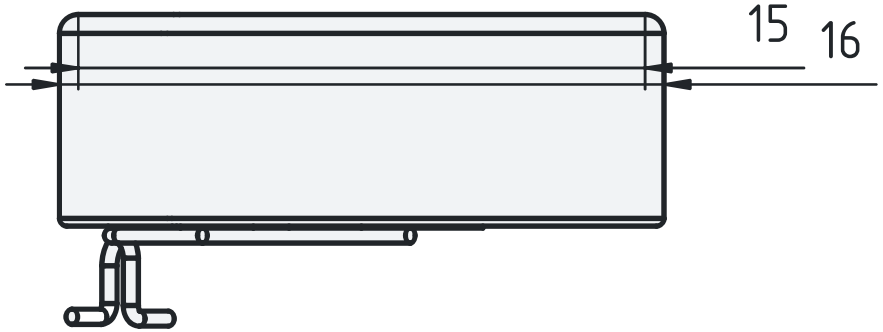

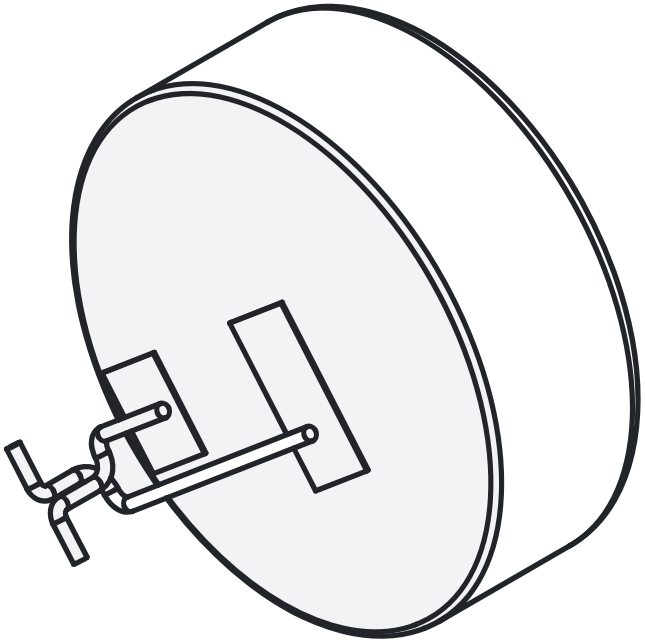

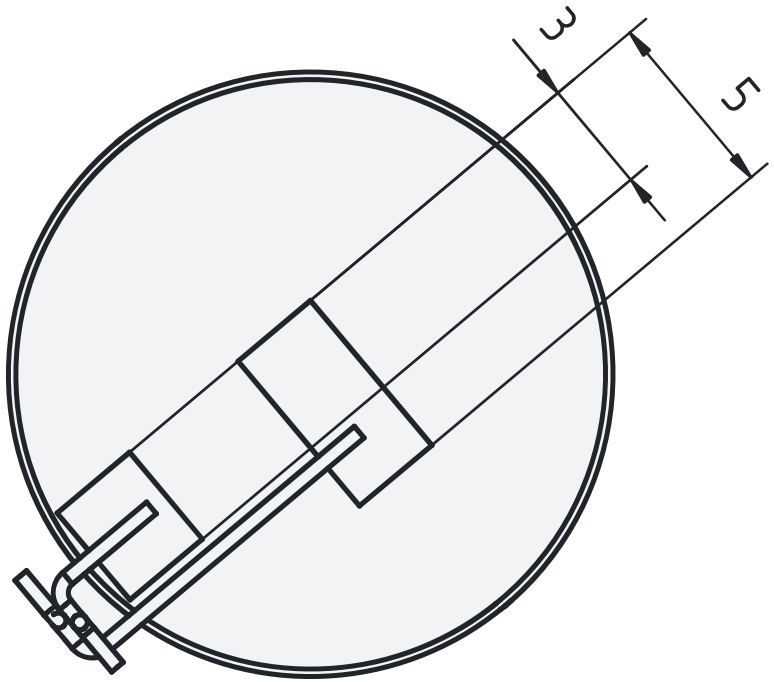

DESIGNED BY:		1654BATTERY-WIRE_7_ASM	
DATE: 12-06-2025			
SIZE A4			
SCALE 1 : 1	WEIGHT (kg)	DRAWING NUMBER	SHEET

This drawing is our property; it can't be reproduced or communicated without our written consent.

G	_
F	_
E	_
D	_
C	_
B	_
A	_

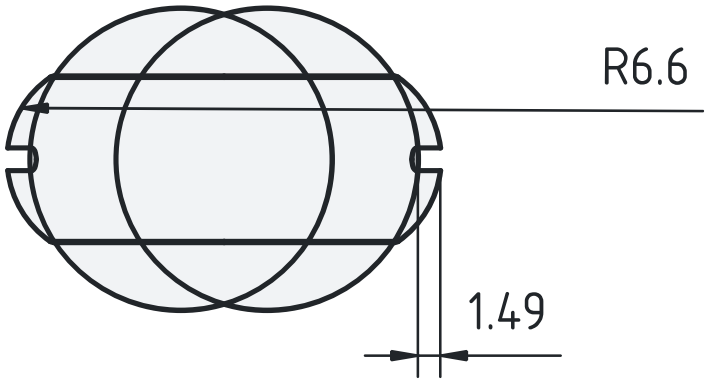

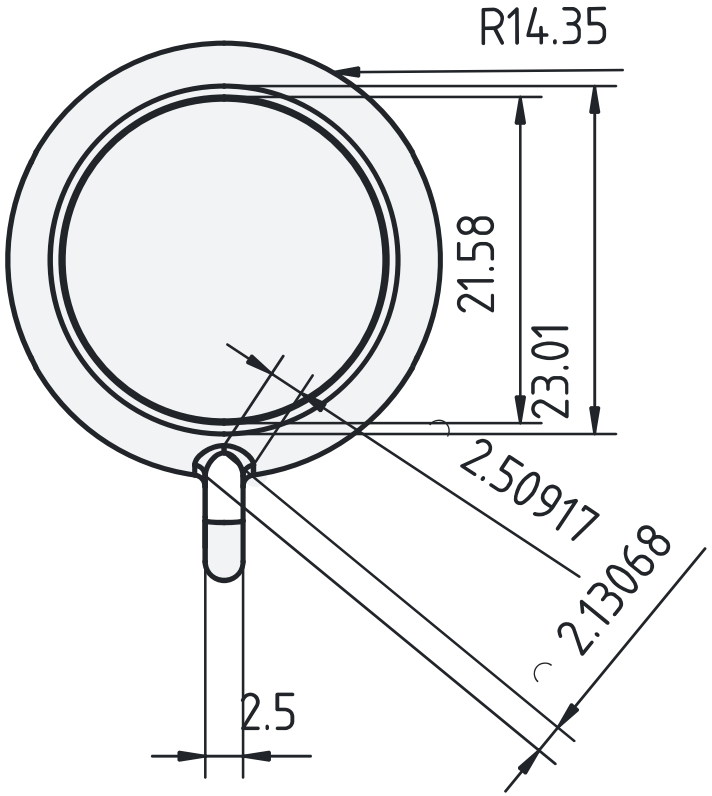

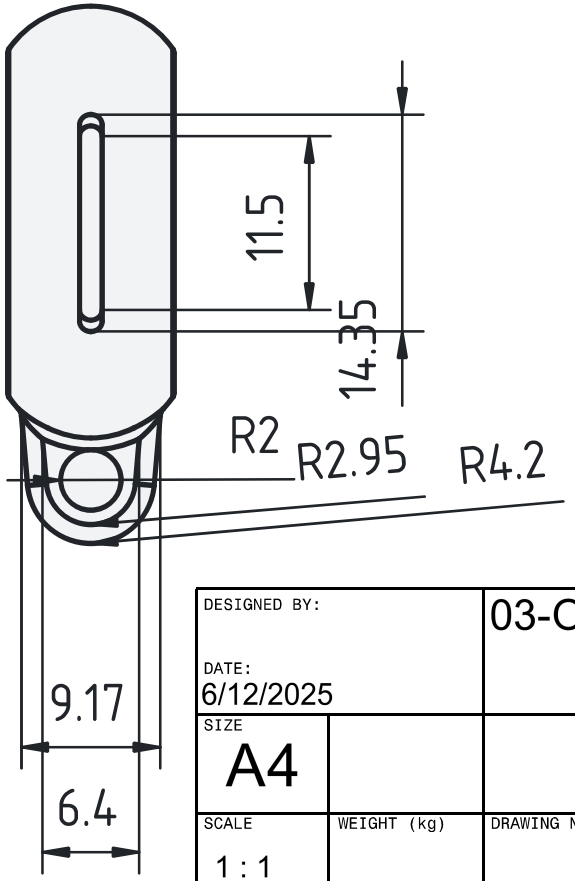

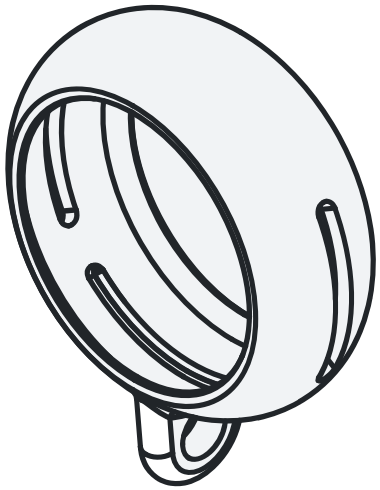

DESIGNED BY:		03-OMIV3-WRAPPER_3		
DATE: 6/12/2025				
SIZE A4				
SCALE 1 : 1	WEIGHT (kg)	DRAWING NUMBER	SHEET	

This drawing is our property; it can't be reproduced or communicated without our written consent.

G	_
F	_
E	_
D	_
C	_
B	_
A	_

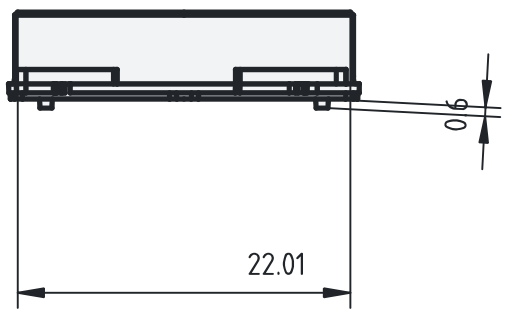

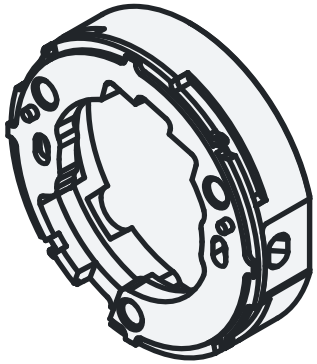

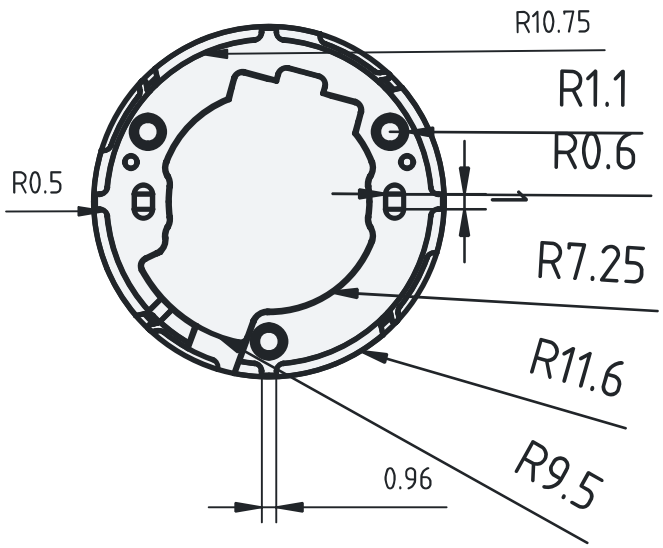

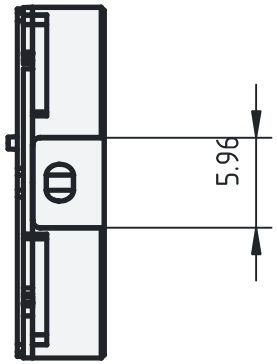

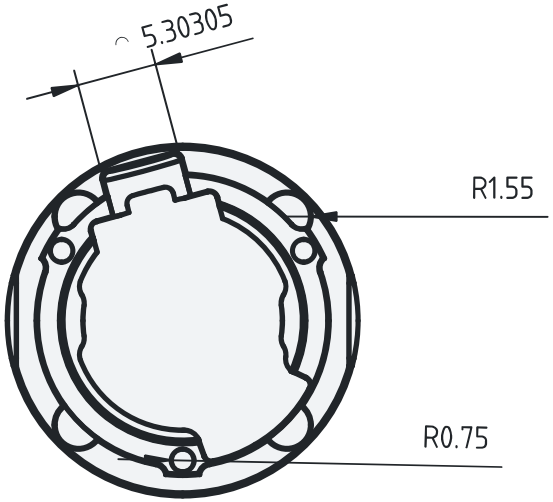

DESIGNED BY: Designed by Name DATE: 12-06-2025		Unnamed Subtitle	
SIZE A4			
SCALE 1 : 1	WEIGHT (kg) Weight	DRAWING NUMBER Drawing number	SHEET 1 / 1

This drawing is our property; it can't be reproduced or communicated without our written consent.

G	_
F	_
E	_
D	_
C	_
B	_
A	_

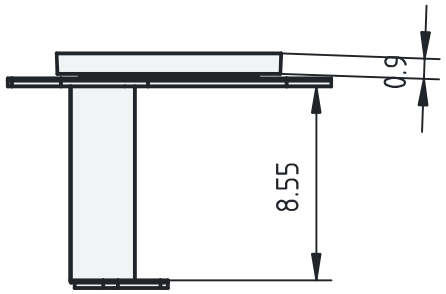

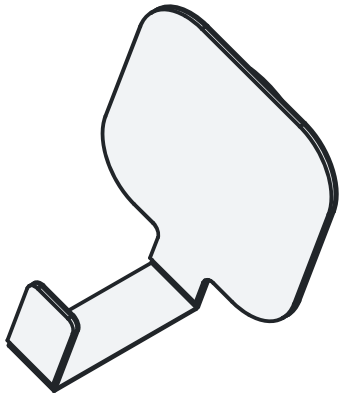

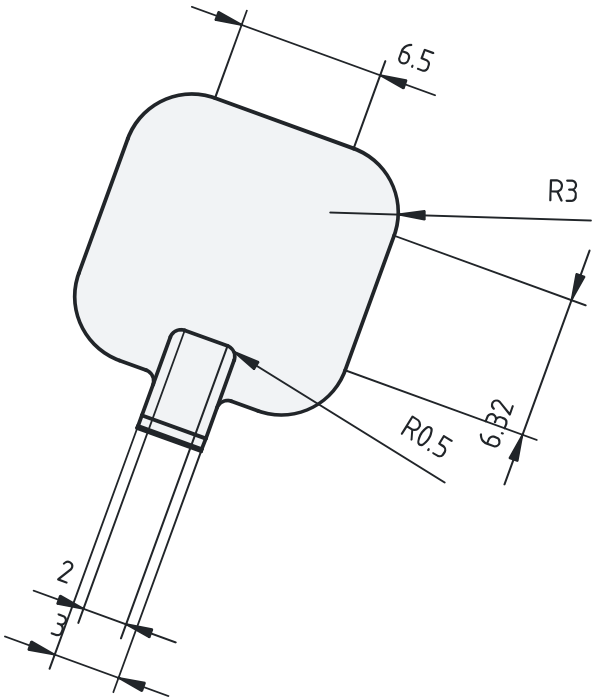

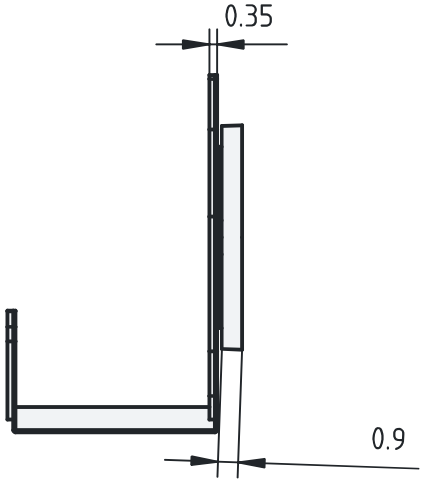

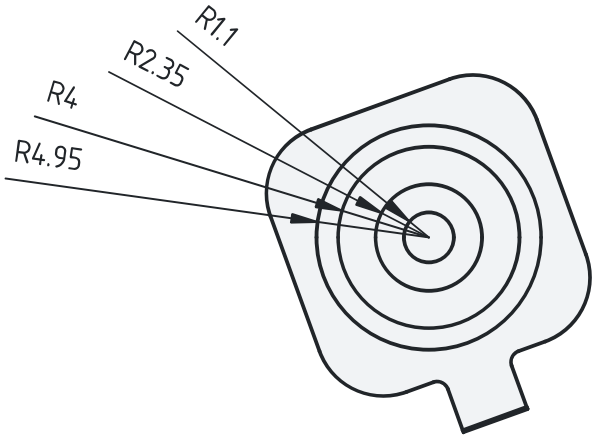

DESIGNED BY:		TOUCH-RING_ASM_18_ASM		
DATE: 12-06-2025				
SIZE A4				
SCALE 1 : 1	WEIGHT (kg)	DRAWING NUMBER	SHEET	

This drawing is our property; it can't be reproduced or communicated without our written consent.

G	_
F	_
E	_
D	_
C	_
B	_
A	_

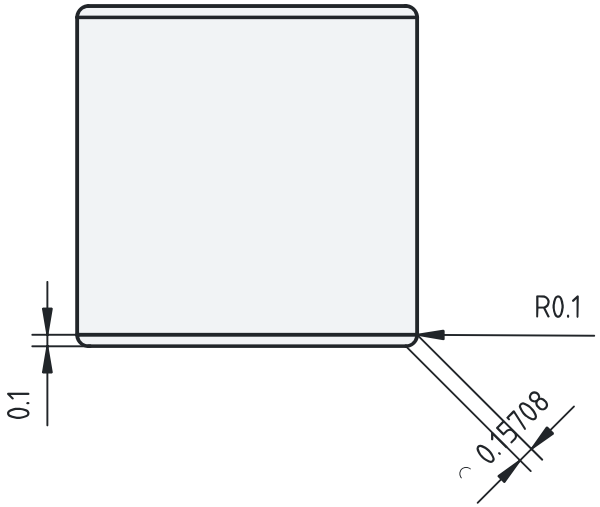

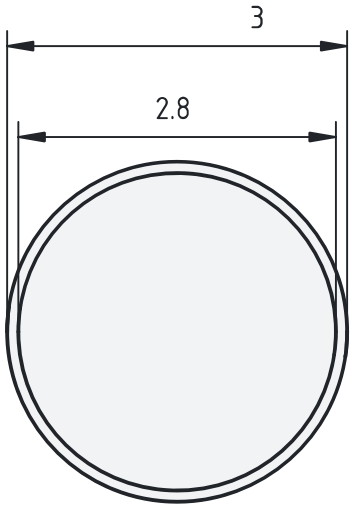

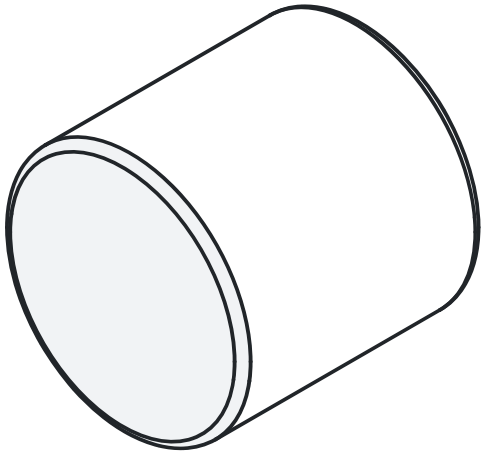

DESIGNED BY:		MAGNET-0330		
DATE: 12-06-2025				
SIZE A4				
SCALE 1 : 1	WEIGHT (kg)	DRAWING NUMBER	SHEET	

This drawing is our property; it can't be reproduced or communicated without our written consent.

G	_
F	_
E	_
D	_
C	_
B	_
A	_

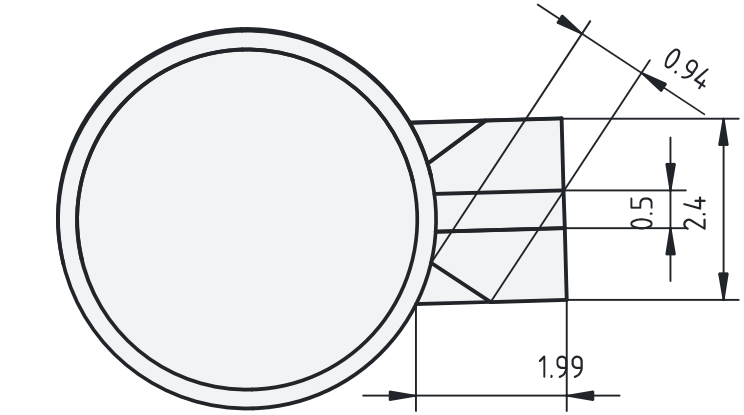

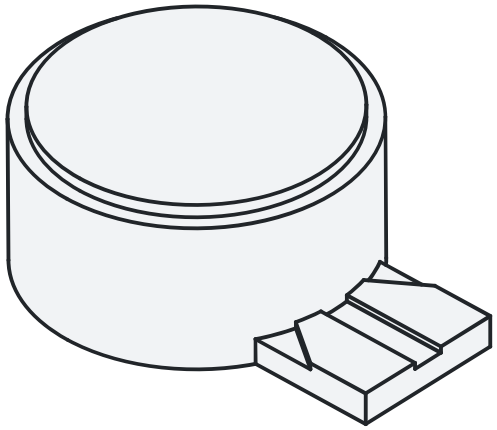

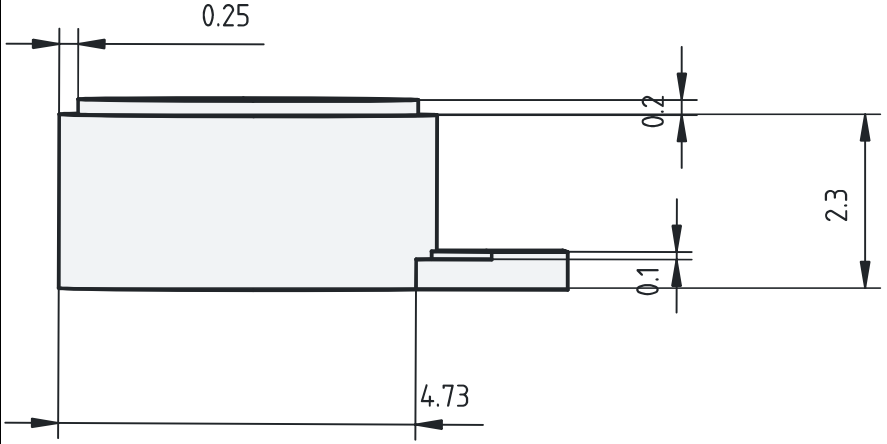

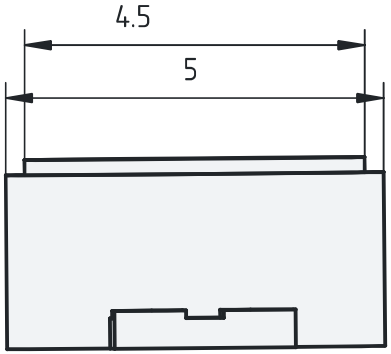

DESIGNED BY:		MOTOR-XKC-0526_6		
DATE: 12-06-2025				
SIZE A4				
SCALE 1 : 1	WEIGHT (kg)	DRAWING NUMBER	SHEET	

This drawing is our property; it can't be reproduced or communicated without our written consent.

G	_
F	_
E	_
D	_
C	_
B	_
A	_

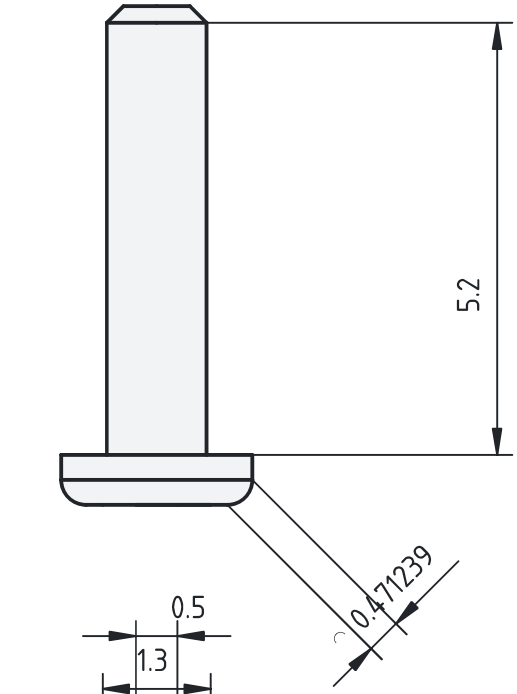

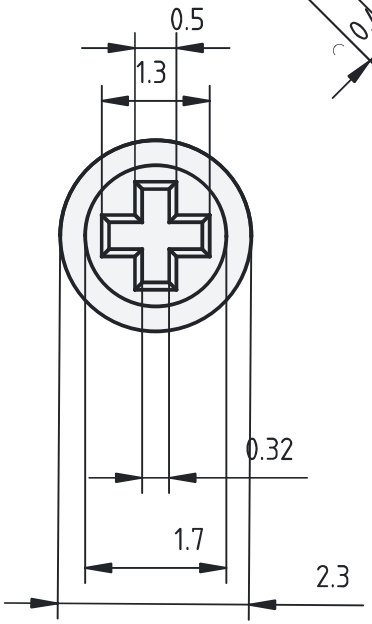

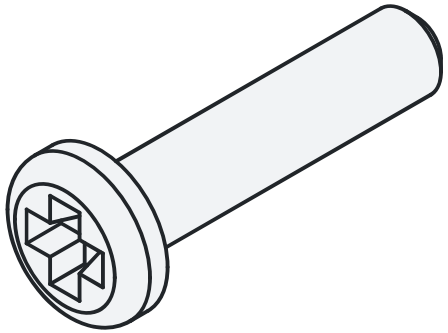

DESIGNED BY:		PB1_2-5-SCREW		
DATE: 12-06-2025				
SIZE A4				
SCALE 1 : 1	WEIGHT (kg)	DRAWING NUMBER	SHEET	

This drawing is our property; it can't be reproduced or communicated without our written consent.

G	_
F	_
E	_
D	_
C	_
B	_
A	_

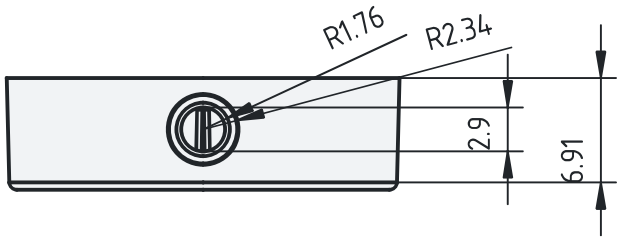

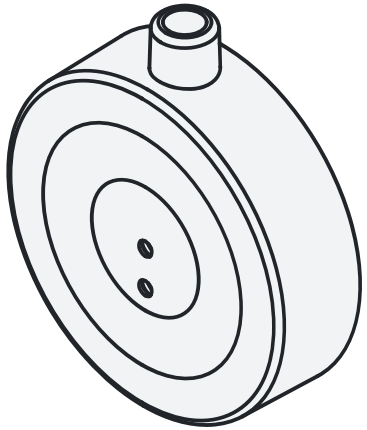

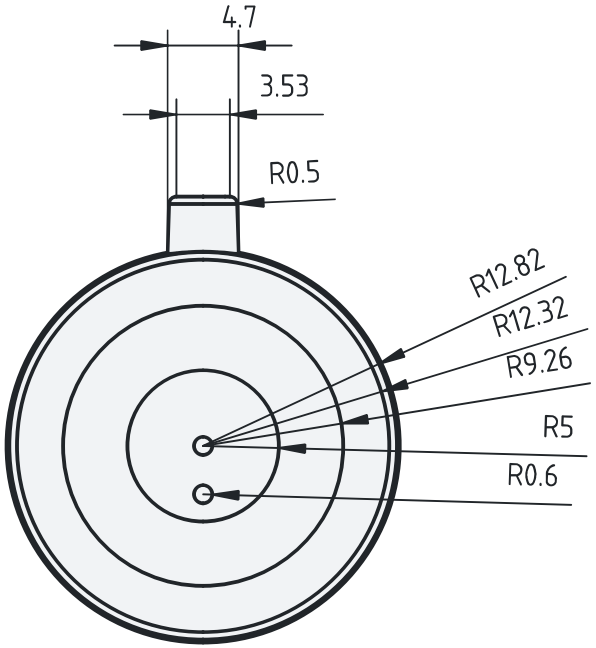

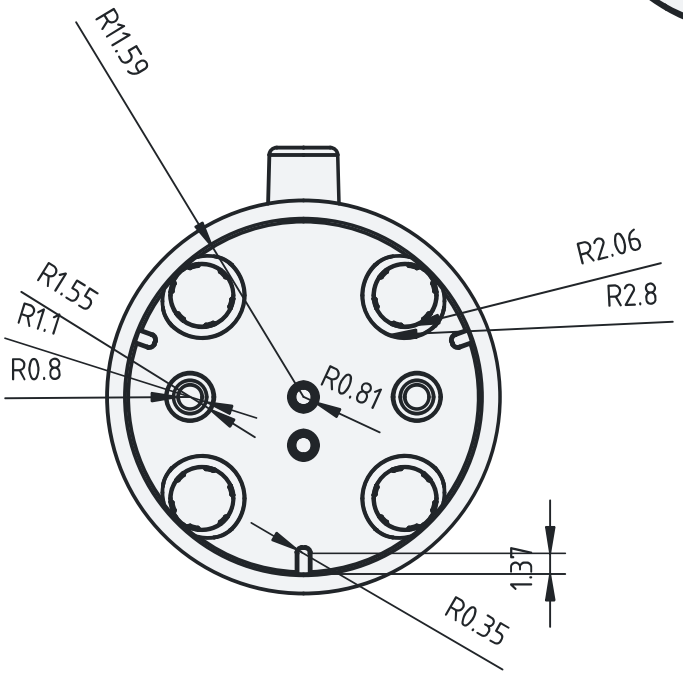

DESIGNED BY:		03-OMI-CHARGER-CASEA_38	
DATE: 12-06-2025			
SIZE A4			
SCALE 1 : 1	WEIGHT (kg)	DRAWING NUMBER	SHEET

This drawing is our property; it can't be reproduced or communicated without our written consent.

G	_
F	_
E	_
D	_
C	_
B	_
A	_

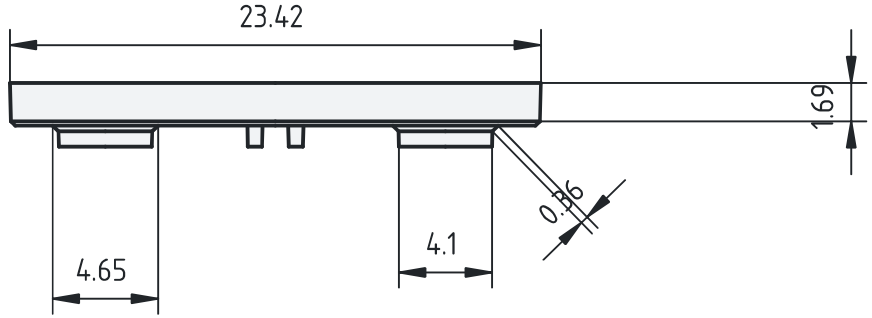

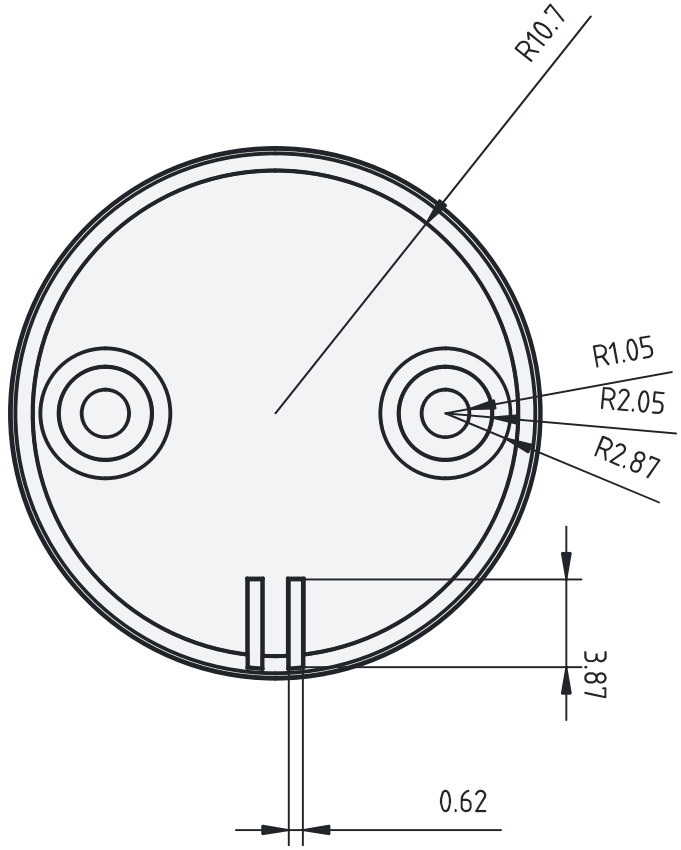

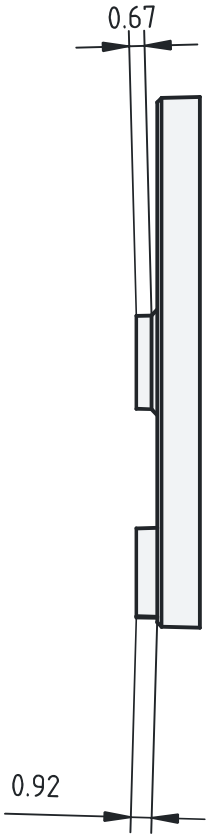

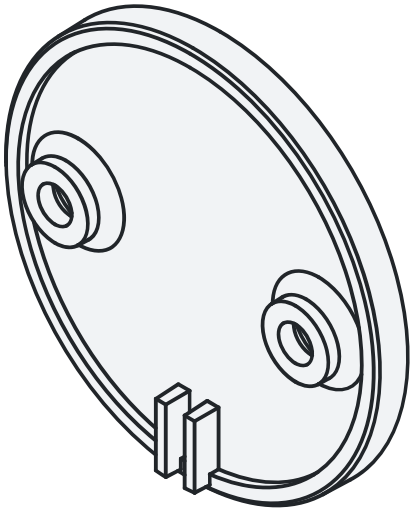

DESIGNED BY:		03-OMI-CHARGER-CASEB_23	
DATE: 12-06-2025			
SIZE A4			
SCALE 1 : 1	WEIGHT (kg)	DRAWING NUMBER	SHEET

This drawing is our property; it can't be reproduced or communicated without our written consent.

G	_
F	_
E	_
D	_
C	_
B	_
A	_

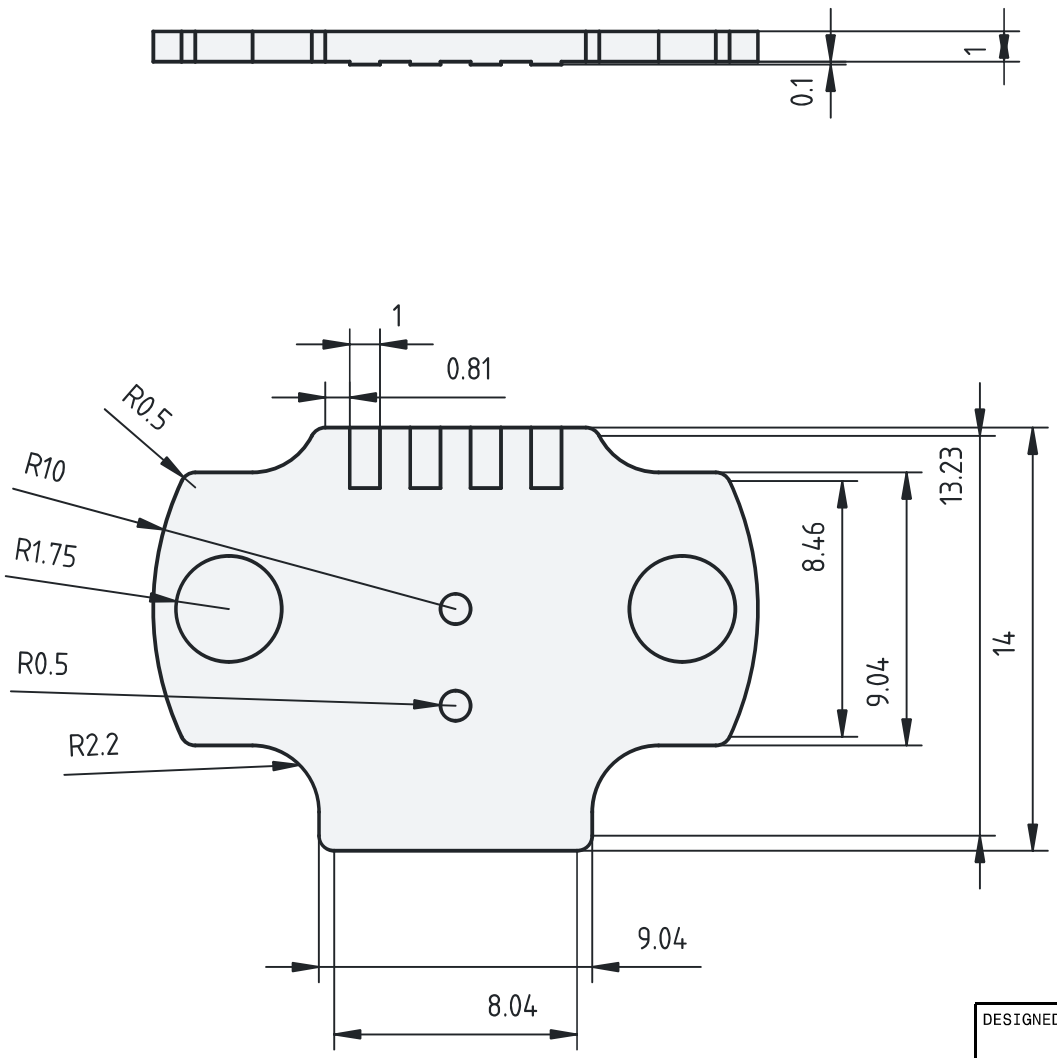

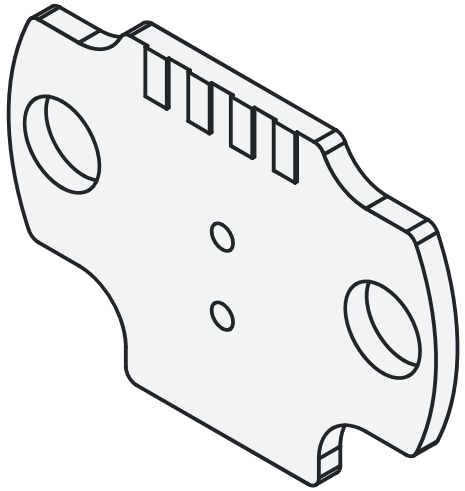

DESIGNED BY:		03-OMI-CHARGERV2-PCB_16		G _
DATE: 12-06-2025				F _
SIZE A4				E _
				D _
SCALE 1 : 1	WEIGHT (kg)	DRAWING NUMBER	SHEET	C _
				B _
This drawing is our property; it can't be reproduced or communicated without our written consent.				A _

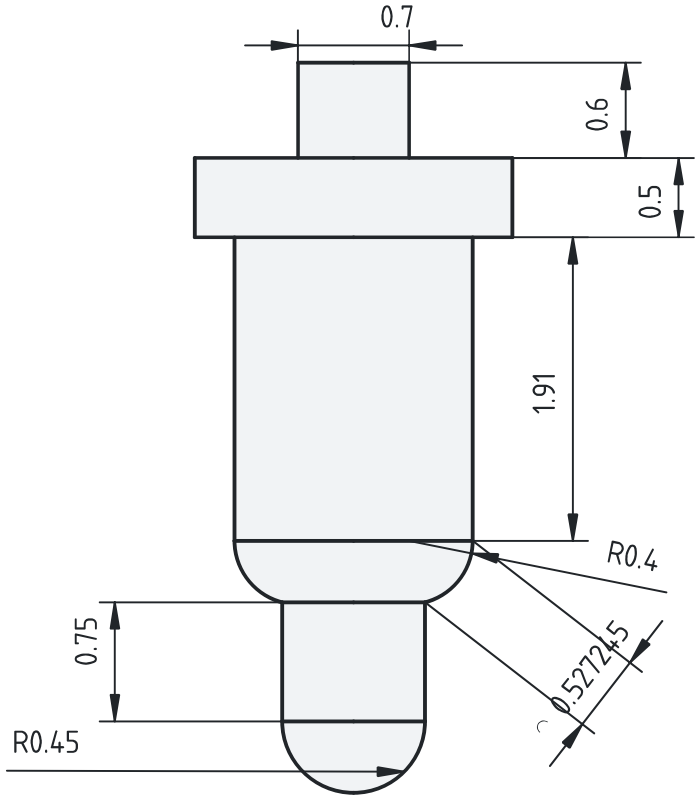

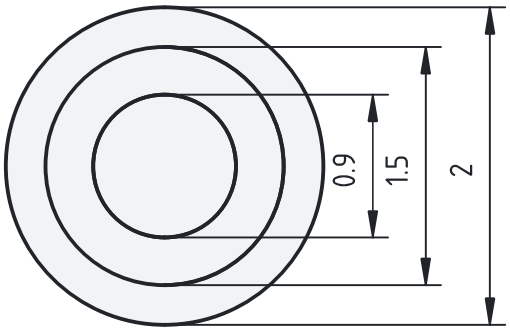

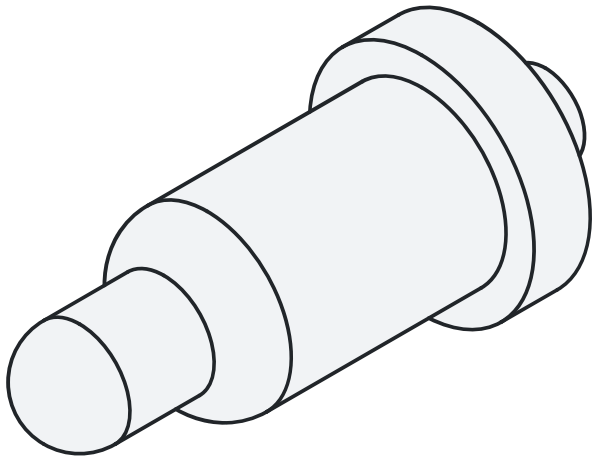

DESIGNED BY:		POGOPIN-D2-H5	
DATE: 12-06-2025			
SIZE A4			
SCALE 1 : 1	WEIGHT (kg)	DRAWING NUMBER	SHEET

This drawing is our property; it can't be reproduced or communicated without our written consent.

G	_
F	_
E	_
D	_
C	_
B	_
A	_

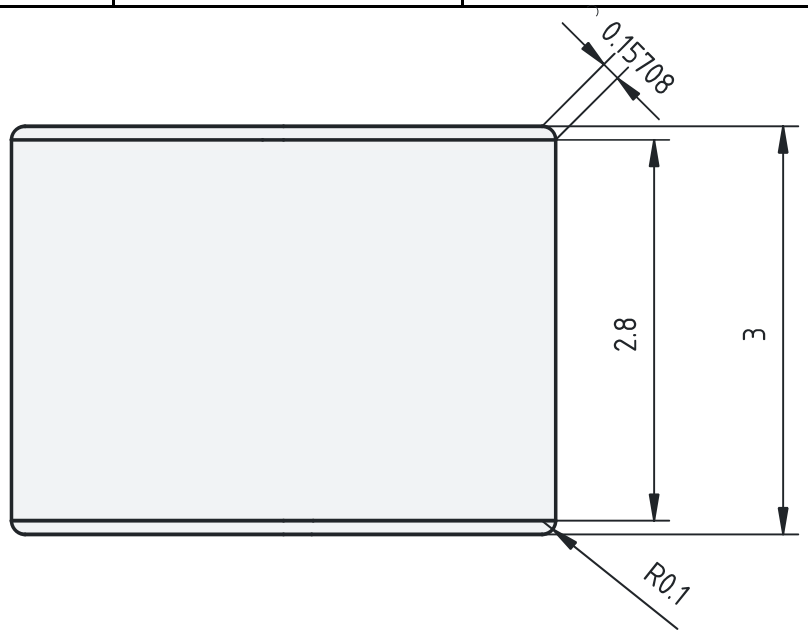

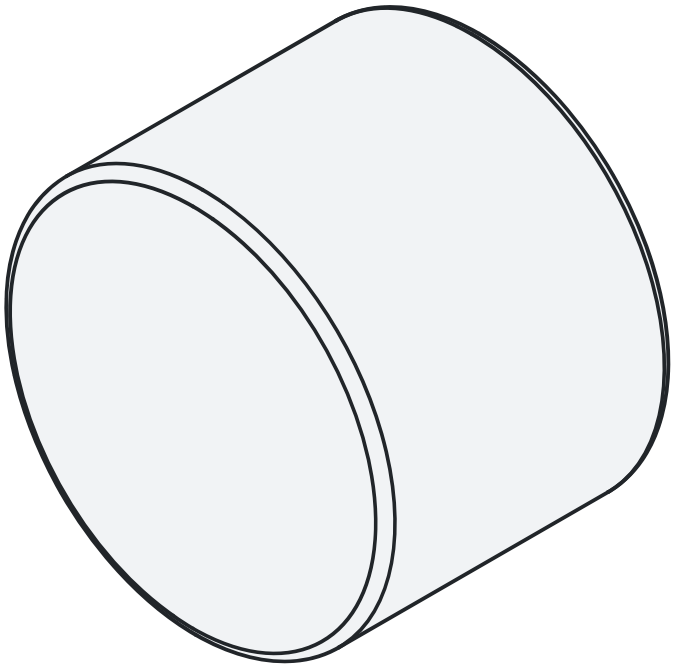

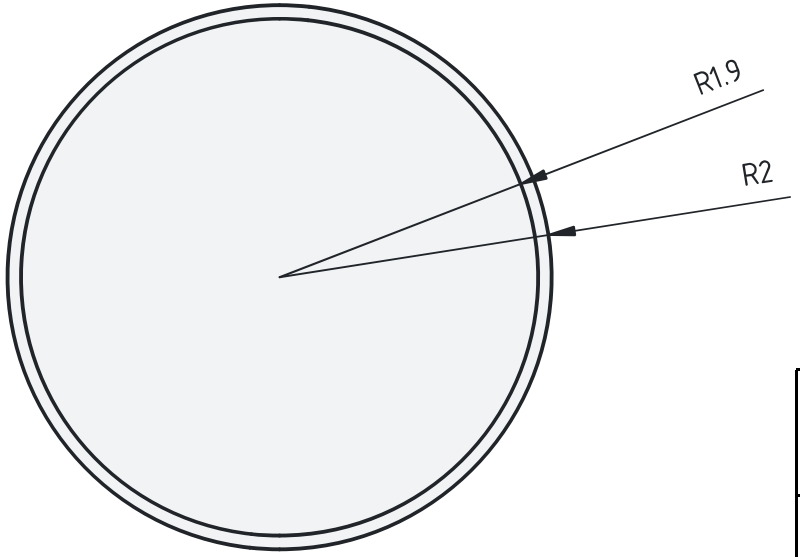

DESIGNED BY:		MAGNET-4030	
DATE: 12-06-2025			
SIZE A4			
SCALE 1 : 1	WEIGHT (kg)	DRAWING NUMBER	SHEET

This drawing is our property; it can't be reproduced or communicated without our written consent.

G	_
F	_
E	_
D	_
C	_
B	_
A	_

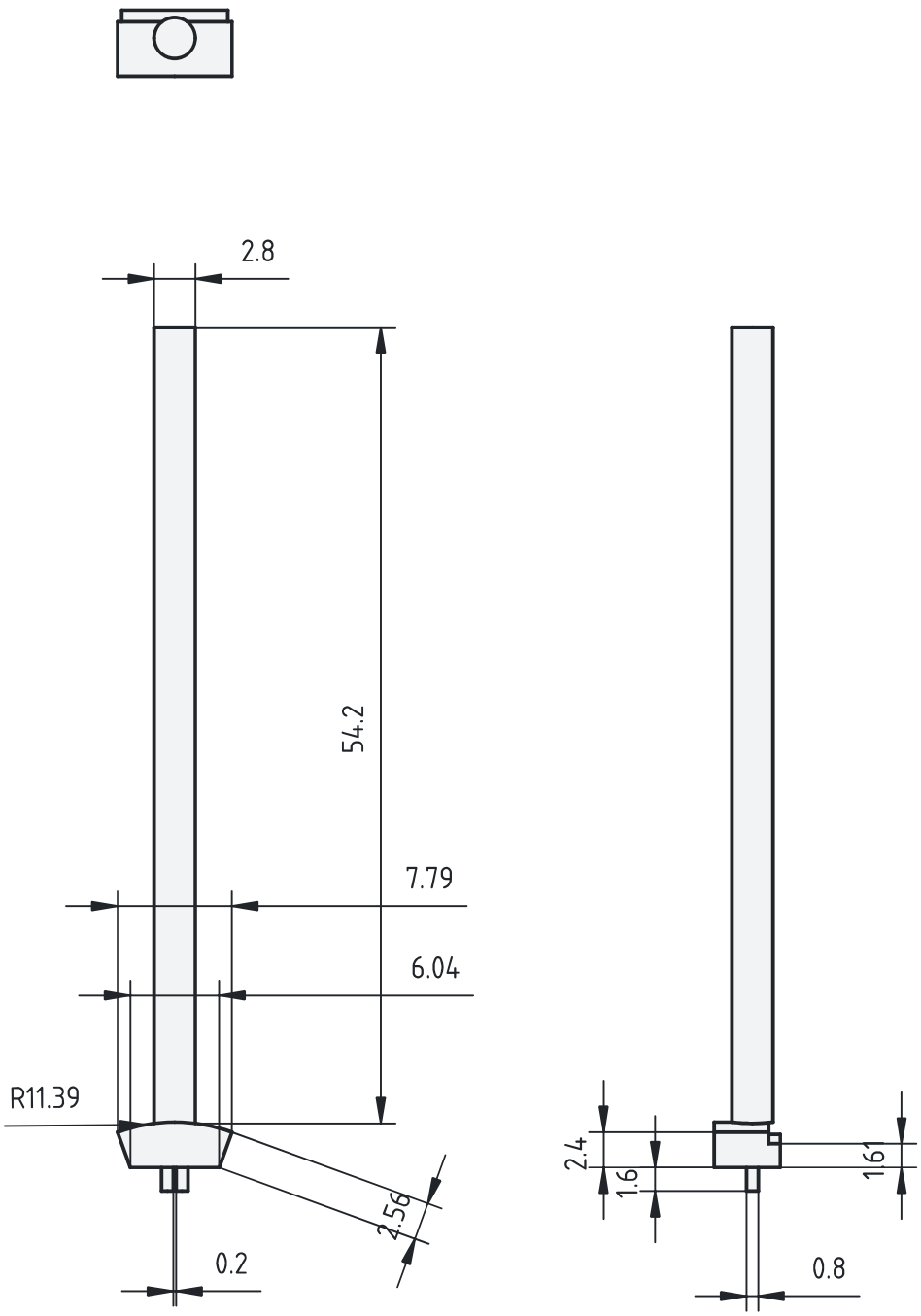

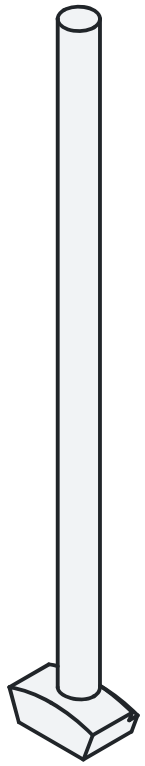

DESIGNED BY:		03-OMI-USB-CABLE_9	
DATE: 12-06-2025			
SIZE A4			
SCALE 1 : 1	WEIGHT (kg)	DRAWING NUMBER	SHEET

G	_
F	_
E	_
D	_
C	_
B	_
A	_

This drawing is our property; it can't be reproduced or communicated without our written consent.

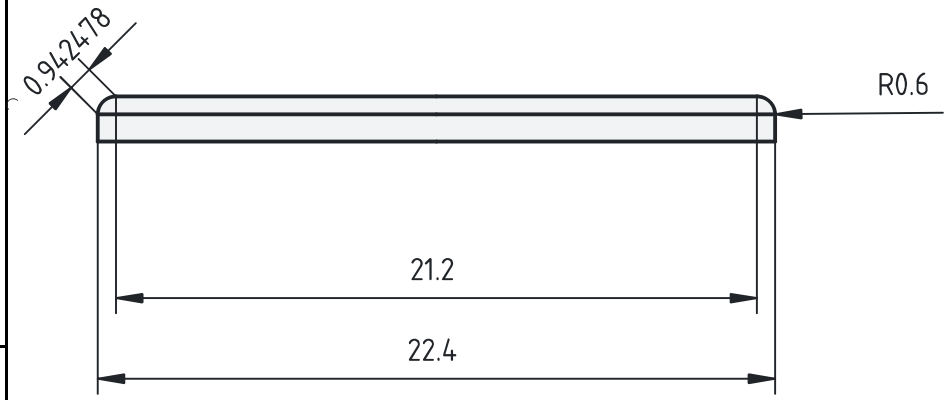

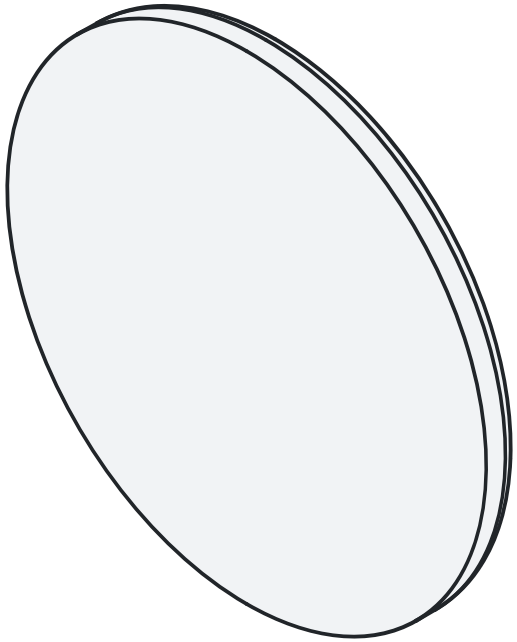

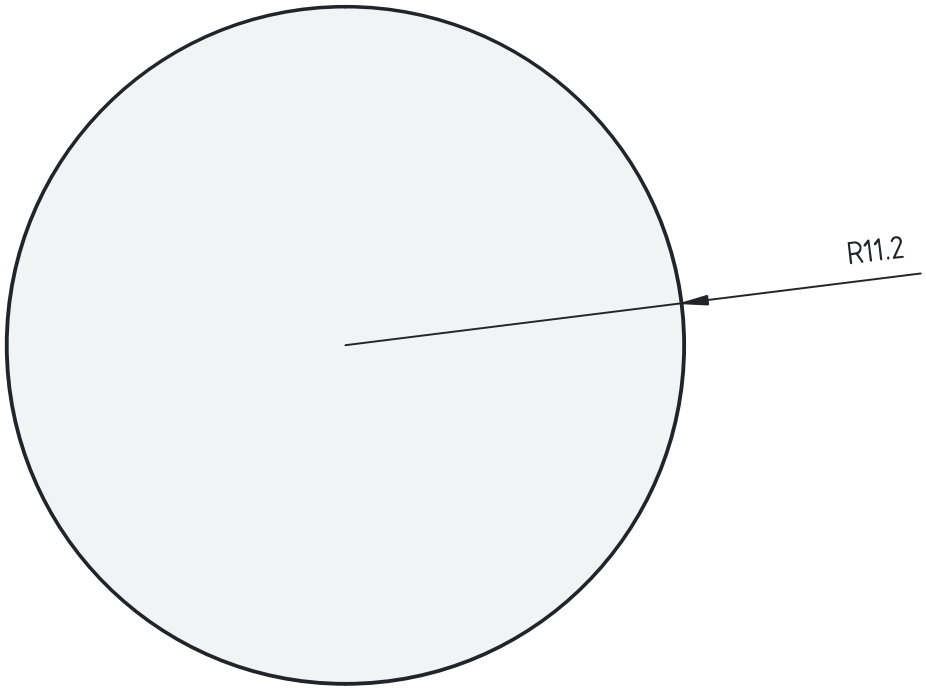

DESIGNED BY:		03-OMI-PAD_7		
DATE: 12-06-2025				
SIZE A4				
SCALE 1 : 1	WEIGHT (kg)	DRAWING NUMBER	SHEET	

G _
F _
E _
D _
C _
B _
A _

This drawing is our property; it can't be reproduced or communicated without our written consent.

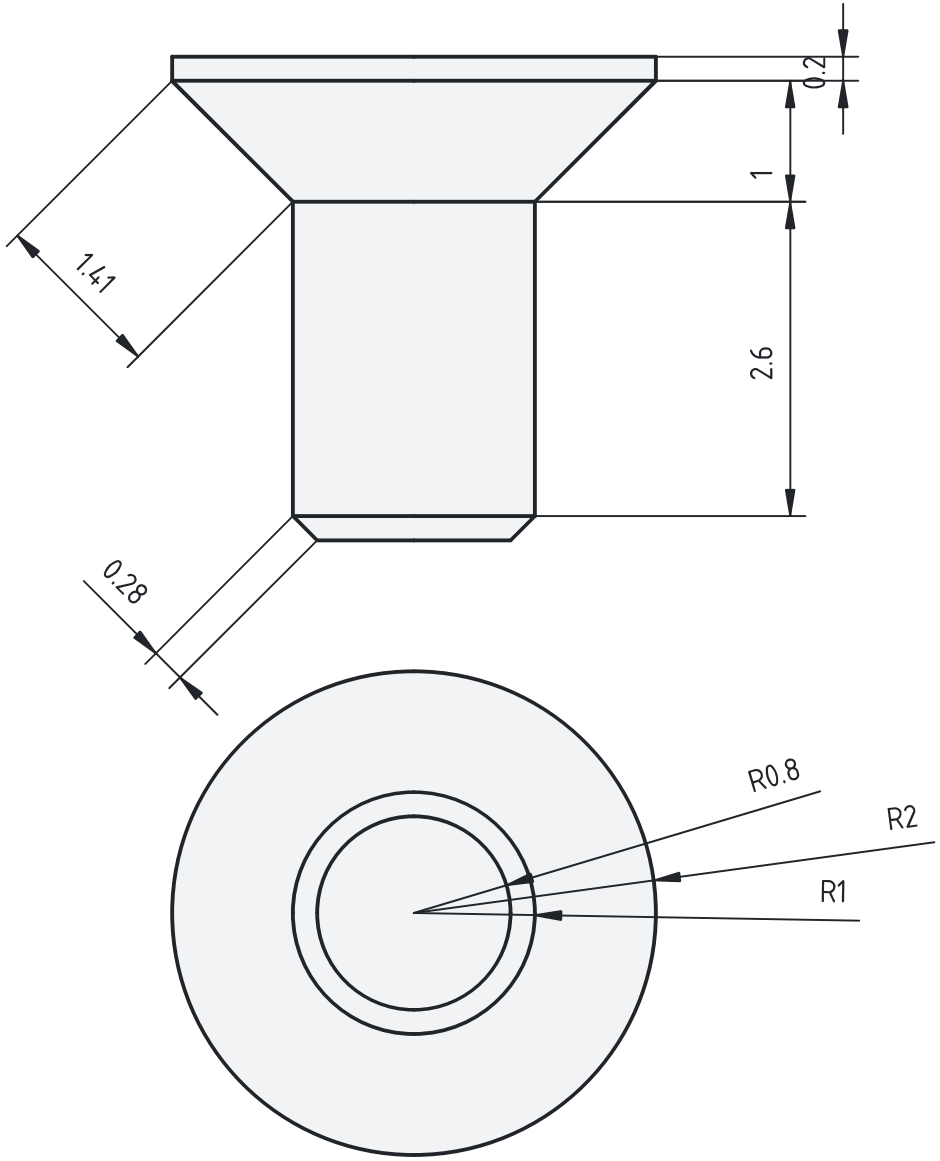

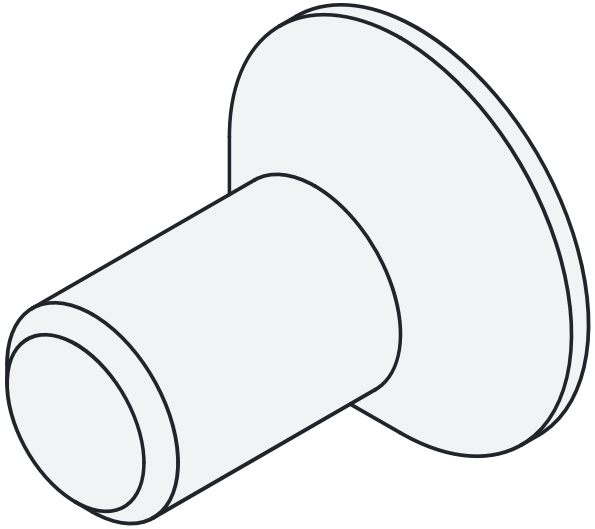

DESIGNED BY:		M2_SCREW	
DATE: 12-06-2025			
SIZE A4			
SCALE 1 : 1	WEIGHT (kg)	DRAWING NUMBER	SHEET

This drawing is our property; it can't be reproduced or communicated without our written consent.

G	_
F	_
E	_
D	_
C	_
B	_
A	_

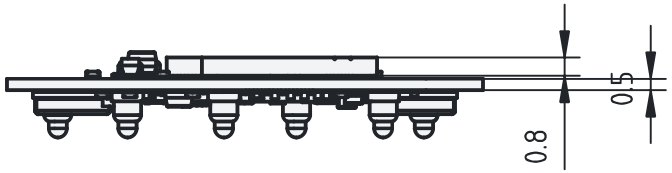

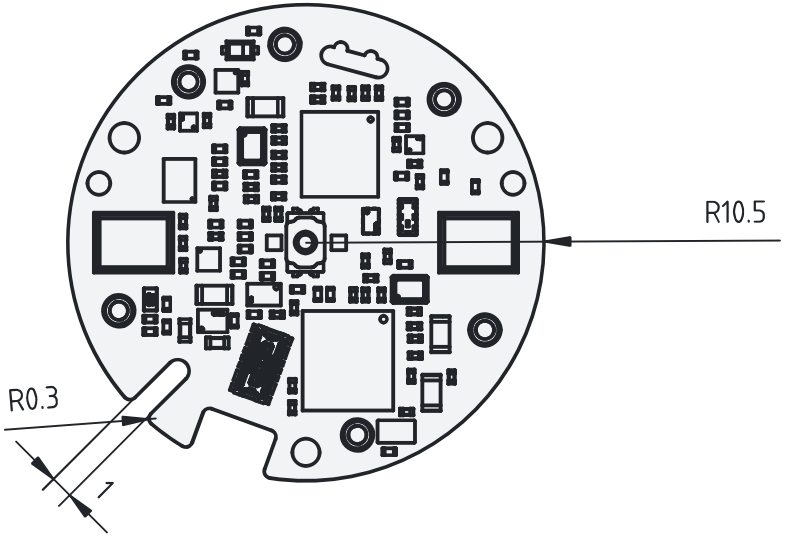

DESIGNED BY:		OMI_V04_ASM_1_ASM	
DATE: 12-06-2025			
SIZE A4			
SCALE 1 : 1	WEIGHT (kg)	DRAWING NUMBER	SHEET

This drawing is our property; it can't be reproduced or communicated without our written consent.

G	_
F	_
E	_
D	_
C	_
B	_
A	_

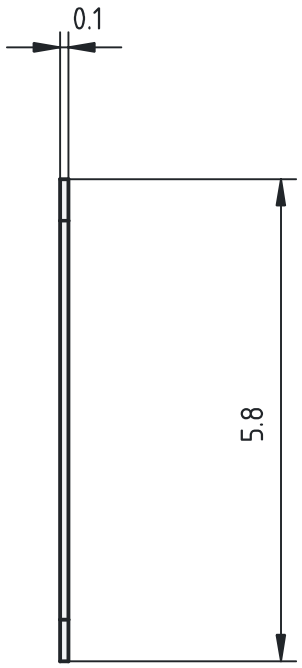

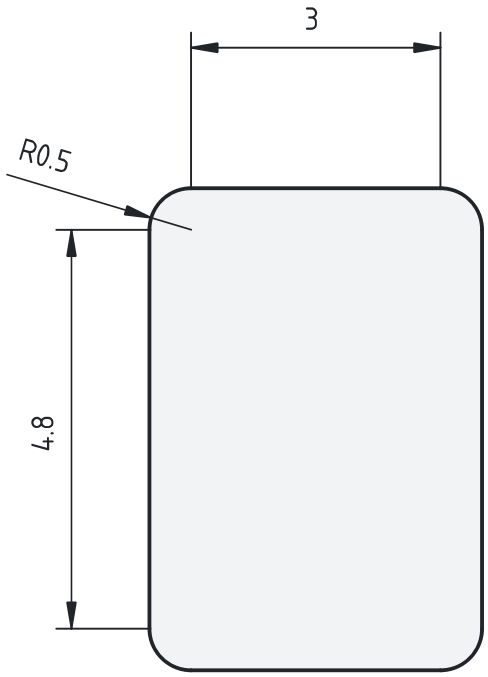

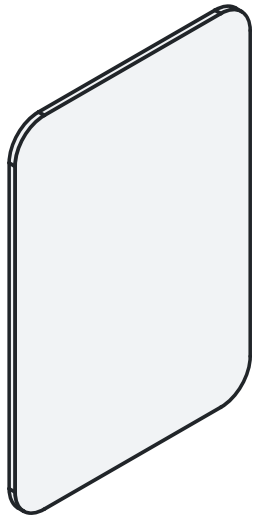

DESIGNED BY:		FILTERMESH		
DATE: 12-06-2025				
SIZE A4				
SCALE 1 : 1	WEIGHT (kg)	DRAWING NUMBER	SHEET	

This drawing is our property; it can't be reproduced or communicated without our written consent.

G	_
F	_
E	_
D	_
C	_
B	_
A	_