Revision History

Revision	Description	Date	
v01	Initial release	2025/01/10	
v02	1. Fixed the DCDC power enable control problem and reversed the enable logic 2. Replaced the charging management chip with TI BQ25101 and added the battery charging temperature detection function 3. Modified the battery installation method and improved the assembly process 4. Added another microphone and modified the microphone installation method for easy assembly 5. Added a rectifier bridge at the charging input to avoid reverse power connection during magnetic charging 6. Added another LED to improve the light transmission effect	2025/04/01	
v03	1. Add a manual reset function. Press and hold the button and place the device on the charger to reset the MCU. 2. Change the power input rectifier bridge circuit to an anti-reverse connection circuit to reduce the voltage drop caused by the input diode and avoid affecting the charging current. 3. Add power control of the RF analog switch to save power consumption.	2025/04/15	
v04	1. Updated the layout to solve the problem of poor WiFi 2.4G signal 2. Changed the vibration motor to LDO power supply to improve vibration reliability 3. Changed the positioning pin of J1 to NC, which is short-circuited with the signal pin on the connector	2025/05/12	
v05	1. Remove the bat+ net on J1 to avoid battery short circuit caused by misalignment of the connector when snapping together	202/05/27	

nRF5340

File: nRF5340.kicad_sch

seeed studio

Sheet: /
File: OMI.kicad_sch

Title: OMI 2

XXXXXX

Size: A3 | Date: | Design: | **Rev: v0.5**

KiCad E.D.A. 9.0.0 | Id: 1/5

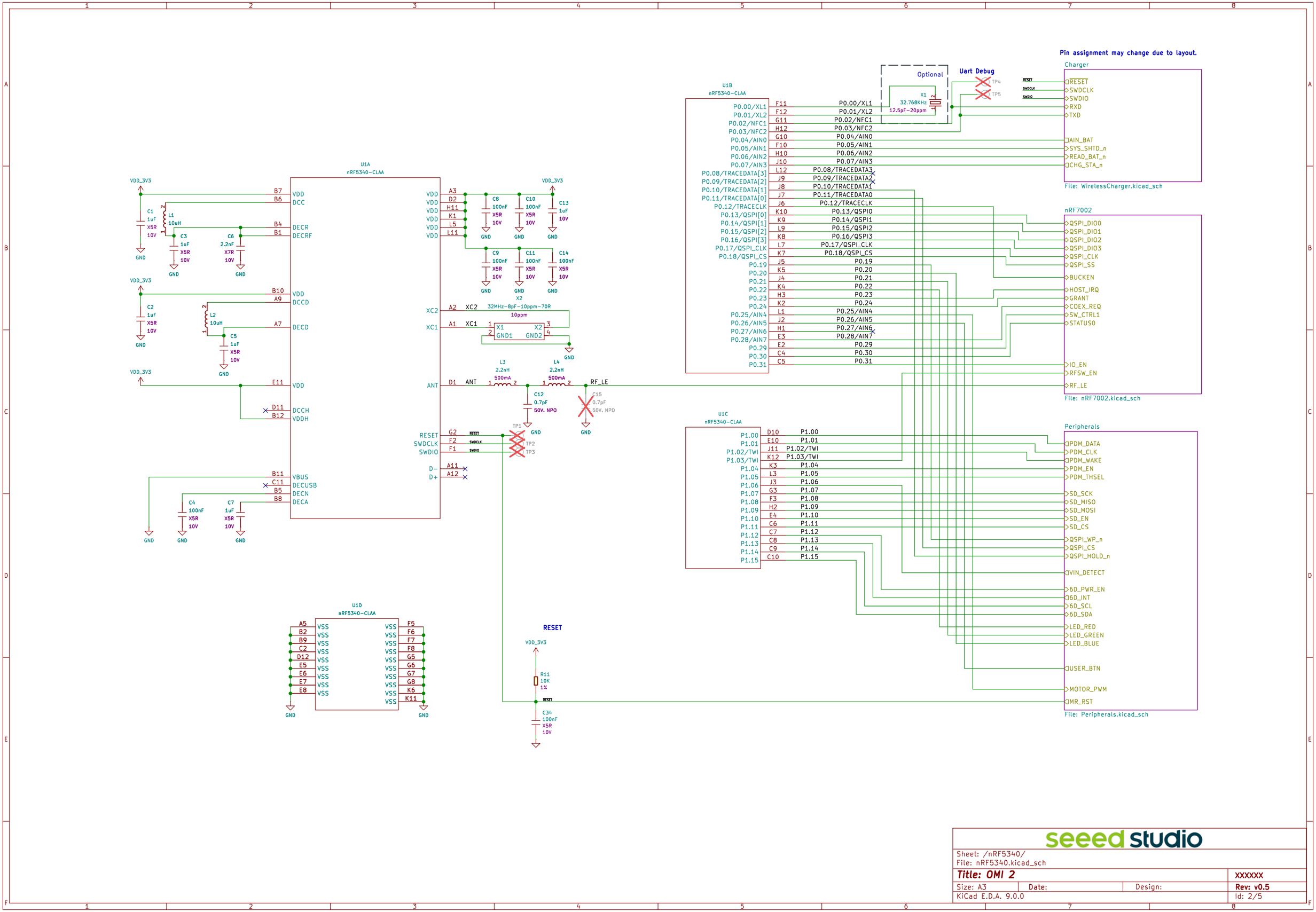
Pin assignment may change due to layout.
U1A
nRF5340-CLAA
U1B
nRF5340-CLAA
U1C
nRF5340-CLAA
U1D
nRF5340-CLAA
Optional
Uart Debug
X1
32.768KHz
12.5pF-20ppm
X2
32MHz-8pF-10ppm-70R
10ppm
L1
10uH
L2
10uH
L3
2.2nH
500mA
L4
2.2nH
500mA
RESET
VDD_3V3
R11
10K
1%
C34
100nF
X5R
10V
Charger
File: WirelessCharger.kicad_sch
nRF7002
File: nRF7002.kicad_sch
Peripherals
File: Peripherals.kicad_sch
seeed studio
Sheet: /nRF5340/
File: nRF5340.kicad_sch
Title: OMI 2
XXXXXX
Size: A3
Date:
Design:
Rev: v0.5
KiCad E.D.A. 9.0.0
Id: 2/5

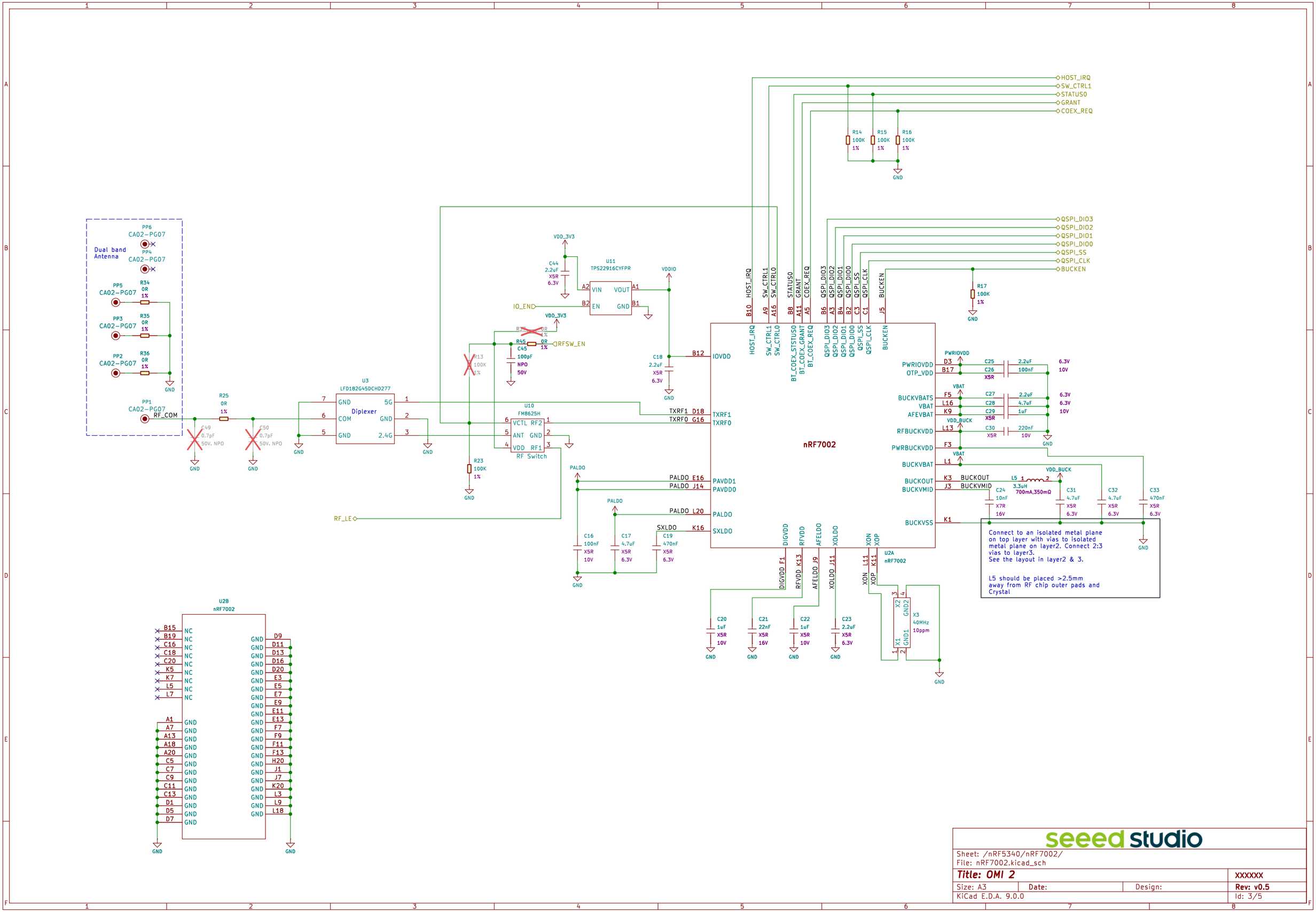
Dual band Antenna
PP6 CA02-PG07
PP4 CA02-PG07
PP5 CA02-PG07
PP3 CA02-PG07
PP2 CA02-PG07
PP1 CA02-PG07
RF_COM
R34 0R 1%
R35 0R 1%
R36 0R 1%
R25 0R 1%
C49 0.7pF 50V, NPO
C50 0.7pF 50V, NPO
U3 LFD182G45DCHD277
Diplexer
GND
COM
5G
2.4G
U10 FM8625H
RF Switch
VCTL RF2
ANT
VDD RF1
R23 100K 1%
R13 100K 1%
R45 0R 1%
C45 100pF NPO 50V
RFSW_EN
IO_END
VDD_3V3
C44 2.2uF X5R 6.3V
U11 TPS22916CYFPR
VIN VOUT EN
VDDIO
C18 2.2uF X5R 6.3V
RF_LE
PALDO
C16 100nF X5R 10V
C17 4.7uF X5R 6.3V
C19 470nF X5R 6.3V
SXLDO
TXRF1
TXRF0
IOVDD
PAVDD1
PAVDD0
HOST_IRQ
SW_CTRL1
SW_CTRL0
BT_COEX_STSTUS0
BT_COEX_GRANT
BT_COEX_REQ
QSPI_DIO3
QSPI_DIO2
QSPI_DIO1
QSPI_DIO0
QSPI_SS
QSPI_CLK
BUCKEN
STATUS0
GRANT
COEX_REQ
R14 100K 1%
R15 100K 1%
R16 100K 1%
R17 100K 1%
nRF7002
PWRIOVDD
OTP_VDD
BUCKVBATS
VBAT
AFEVBAT
RFBUCKVDD
PWRBUCKVDD
BUCKVBAT
BUCKOUT
BUCKVMID
BUCKVSS
C25 2.2uF 6.3V
C26 100nF 10V X5R
C27 2.2uF 6.3V
C28 4.7uF 6.3V
C29 1uF 10V X5R
C30 220nF 10V X5R
L5 3.3uH 700mA,350mΩ
C24 10nF X7R 16V
C31 4.7uF X5R 6.3V
C32 4.7uF X5R 6.3V
C33 470nF X5R 6.3V
Connect to an isolated metal plane on top layer with vias to isolated metal plane on layer2. Connect 2:3 vias to layer3.
See the layout in layer2 & 3.
L5 should be placed >2.5mm away from RF chip outer pads and Crystal
DIGVDD
RFVDD
AFELDO
XOLDO
XON
XOP
U2A nRF7002
X3 40MHz 10ppm
C20 1uF X5R 10V
C21 22nF X5R 16V
C22 1uF X5R 10V
C23 2.2uF X5R 6.3V
U2B nRF7002
NC
GND
seeed studio
Sheet: /nRF5340/nRF7002/
File: nRF7002.kicad_sch
Title: OMI 2
XXXXXX
Size: A3
Date:
Design:
Rev: v0.5
KiCad E.D.A. 9.0.0
Id: 3/5

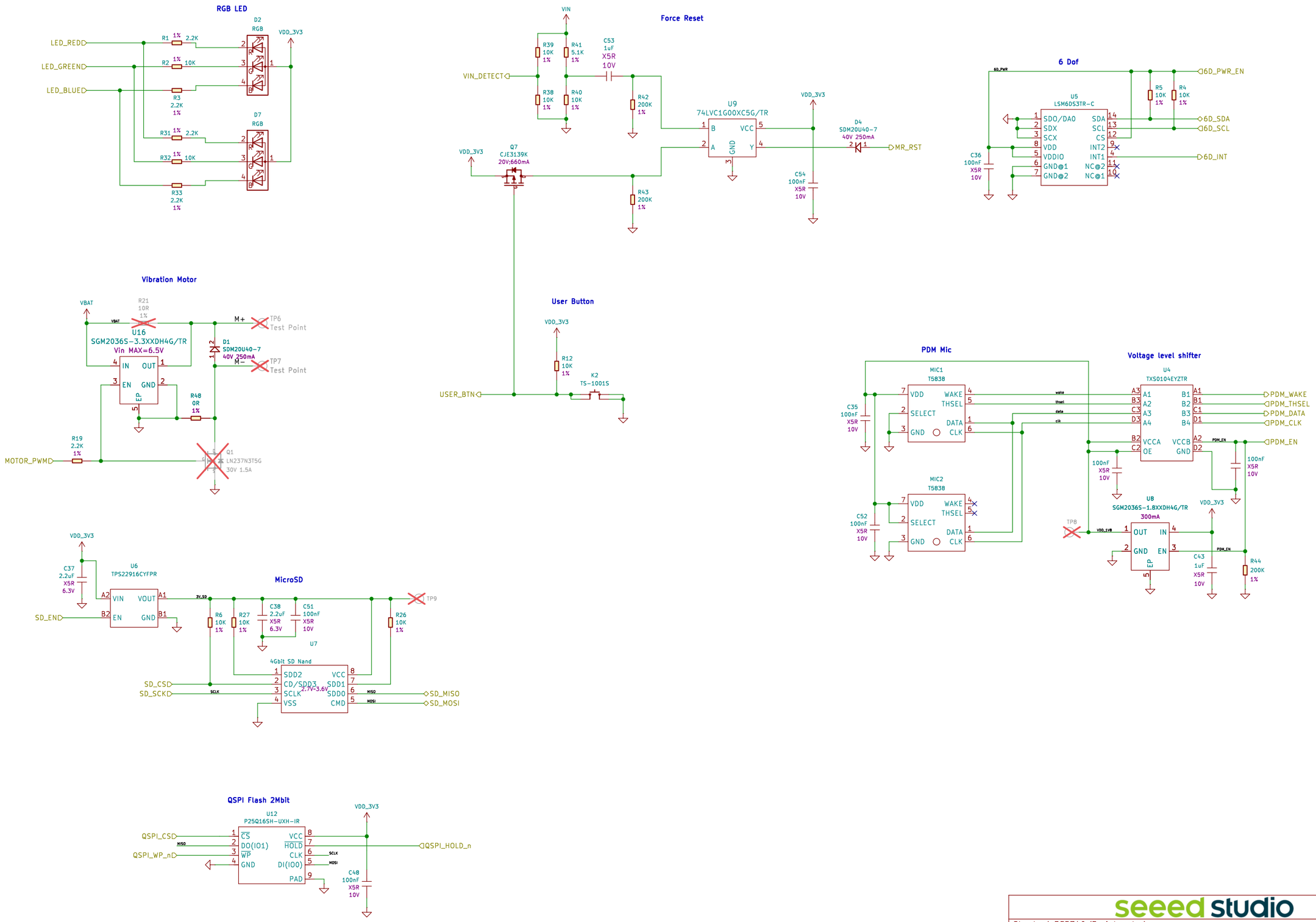

seeed studio

Sheet: /nRF5340/Peripherals/
File: Peripherals.kicad_sch

Title: OMI 2			XXXXXX
Size: A3	Date:	Design:	**Rev: v0.5**
KiCad E.D.A. 9.0.0			Id: 4/5

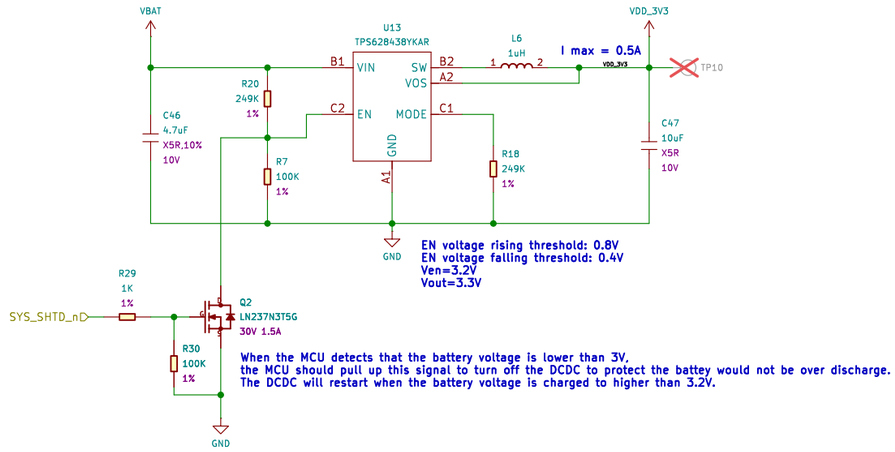

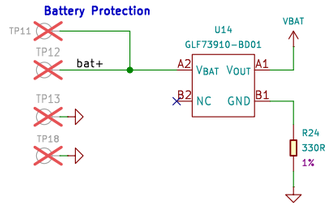

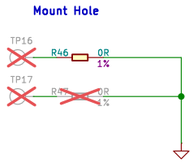

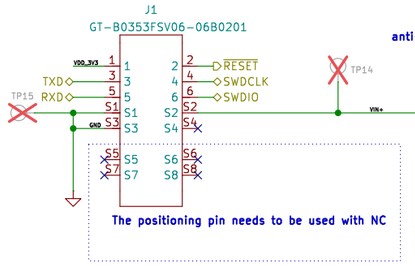

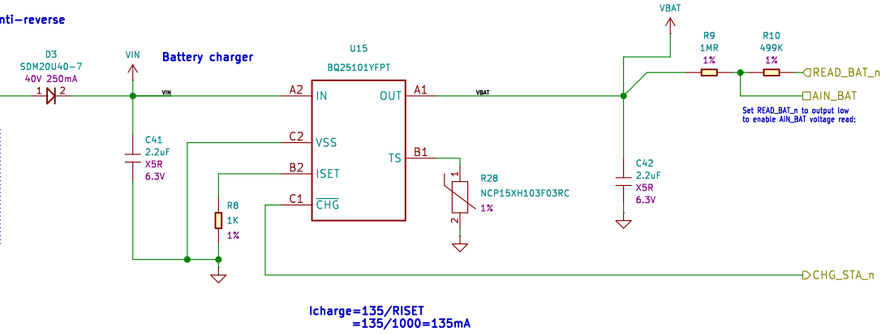

seeed studio

Sheet: /nRF5340/Charger/
File: WirelessCharger.kicad_sch

Title: OMI 2			XXXXXX
Size: A3	Date:	Design:	Rev: v0.5
KiCad E.D.A. 9.0.0			Id: 5/5