Type-c(Serial)

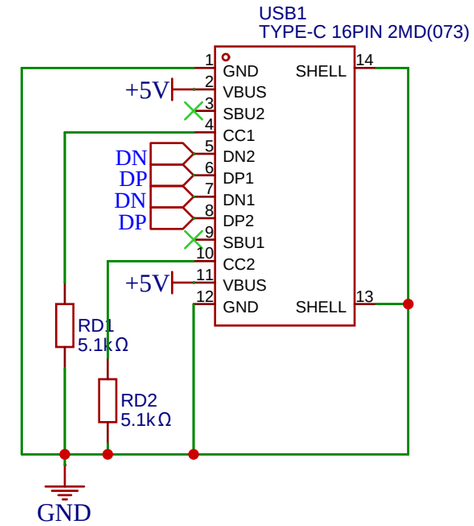

Main SW

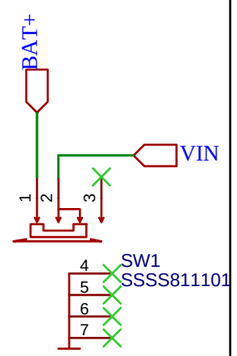

BAT_Monitor

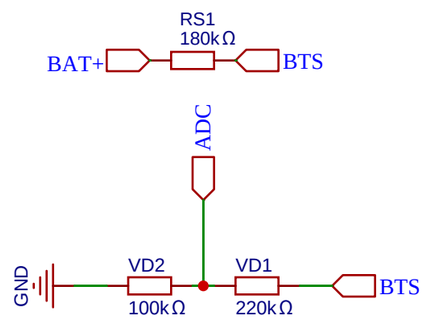

CONNECTOR(POGO)

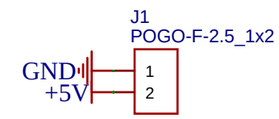

CHARGE

300mA Charge

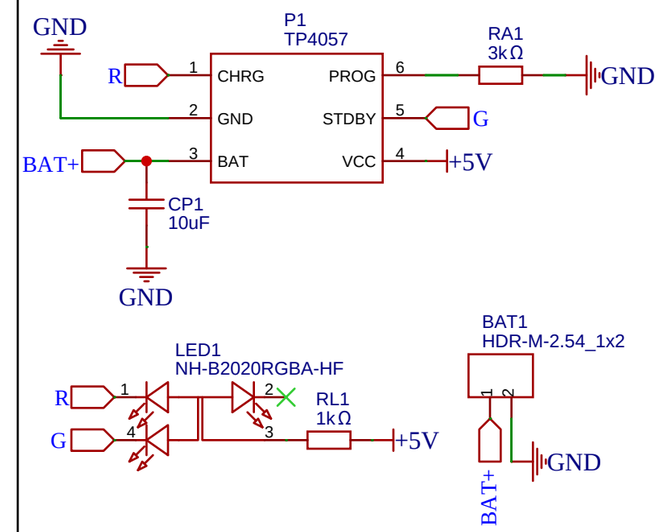

USB-UART

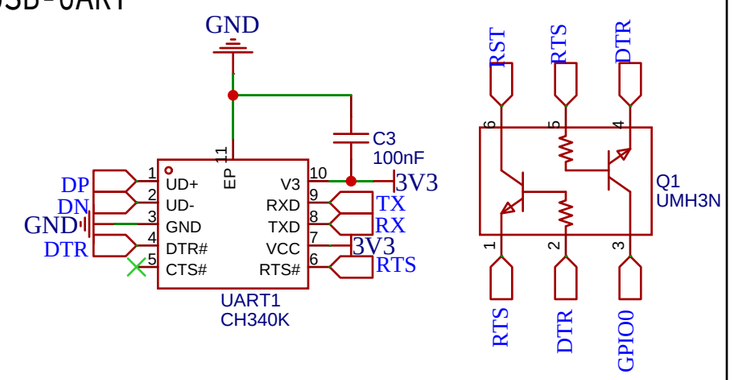

LDO-3V3

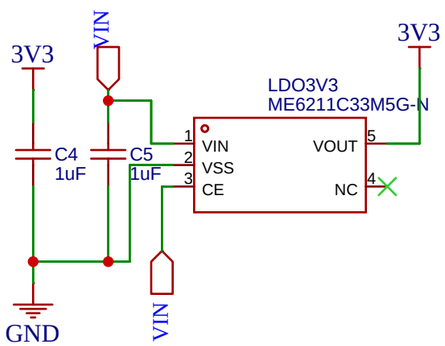

SENSOR

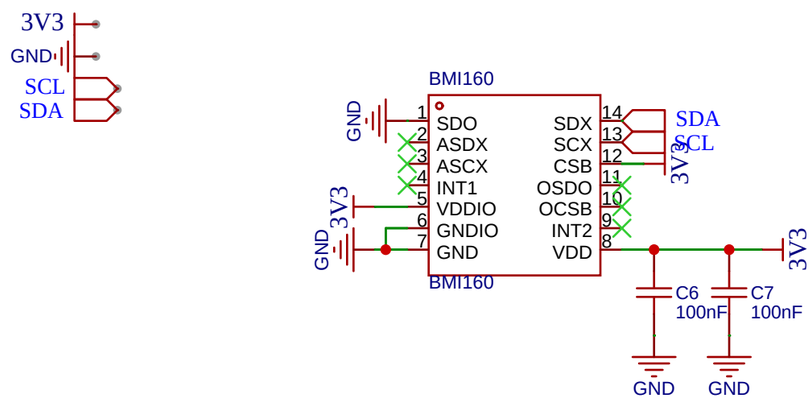

ESP8266

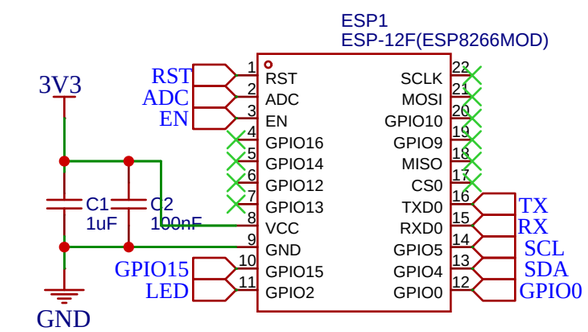

Schematic	Cheese	Update Date	2023-06-16
		Create Date	
Page	BMI160	Part Number	
Drawed	SlimeVR-CheeseCake		
Reviewed			
		VER	SIZE	PAGE OF
嘉立创EDA	V2.3		Designed by SoraKage