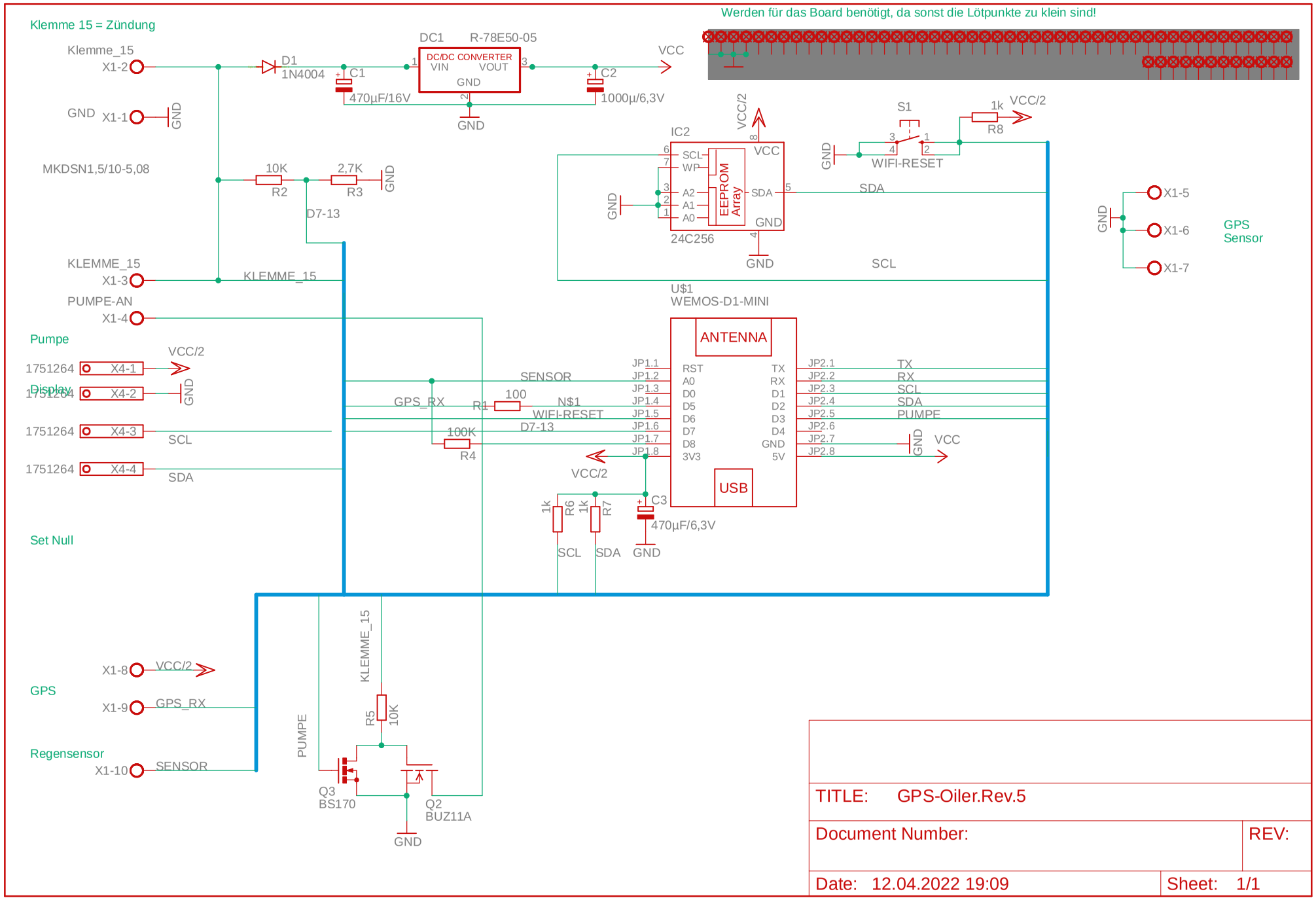
Klemme 15 = Zündung
Werden für das Board benötigt, da sonst die Lötpunkte zu klein sind!
Klemme_15
X1-2
D1
1N4004
C1
470µF/16V
DC1
R-78E50-05
DC/DC CONVERTER
VIN
VOUT
GND
VCC
C2
1000µ/6,3V
GND
X1-1
MKDSN1,5/10-5,08
10K
R2
2,7K
R3
D7-13
KLEMME_15
X1-3
PUMPE-AN
X1-4
Pumpe
VCC/2
1751264
X4-1
X4-2
X4-3
X4-4
SCL
SDA
Set Null
IC2
SCL
WP
A2
A1
A0
EEPROM Array
SDA
24C256
S1
WIFI-RESET
1k
R8
U$1
WEMOS-D1-MINI
ANTENNA
RST
A0
D0
D5
D6
D7
D8
3V3
TX
RX
D1
D2
D3
D4
GND
5V
USB
JP1.1
JP1.2
JP1.3
JP1.4
JP1.5
JP1.6
JP1.7
JP1.8
JP2.1
JP2.2
JP2.3
JP2.4
JP2.5
JP2.6
JP2.7
JP2.8
SENSOR
GPS_RX
R1
100
N$1
WIFI-RESET
D7-13
100K
R4
R6
R7
C3
470µF/6,3V
X1-5
X1-6
X1-7
GPS Sensor
X1-8
X1-9
GPS
Regensensor
X1-10
PUMPE
R5
10K
Q3
BS170
Q2
BUZ11A
TITLE: GPS-Oiler.Rev.5
Document Number:
REV:
Date: 12.04.2022 19:09
Sheet: 1/1