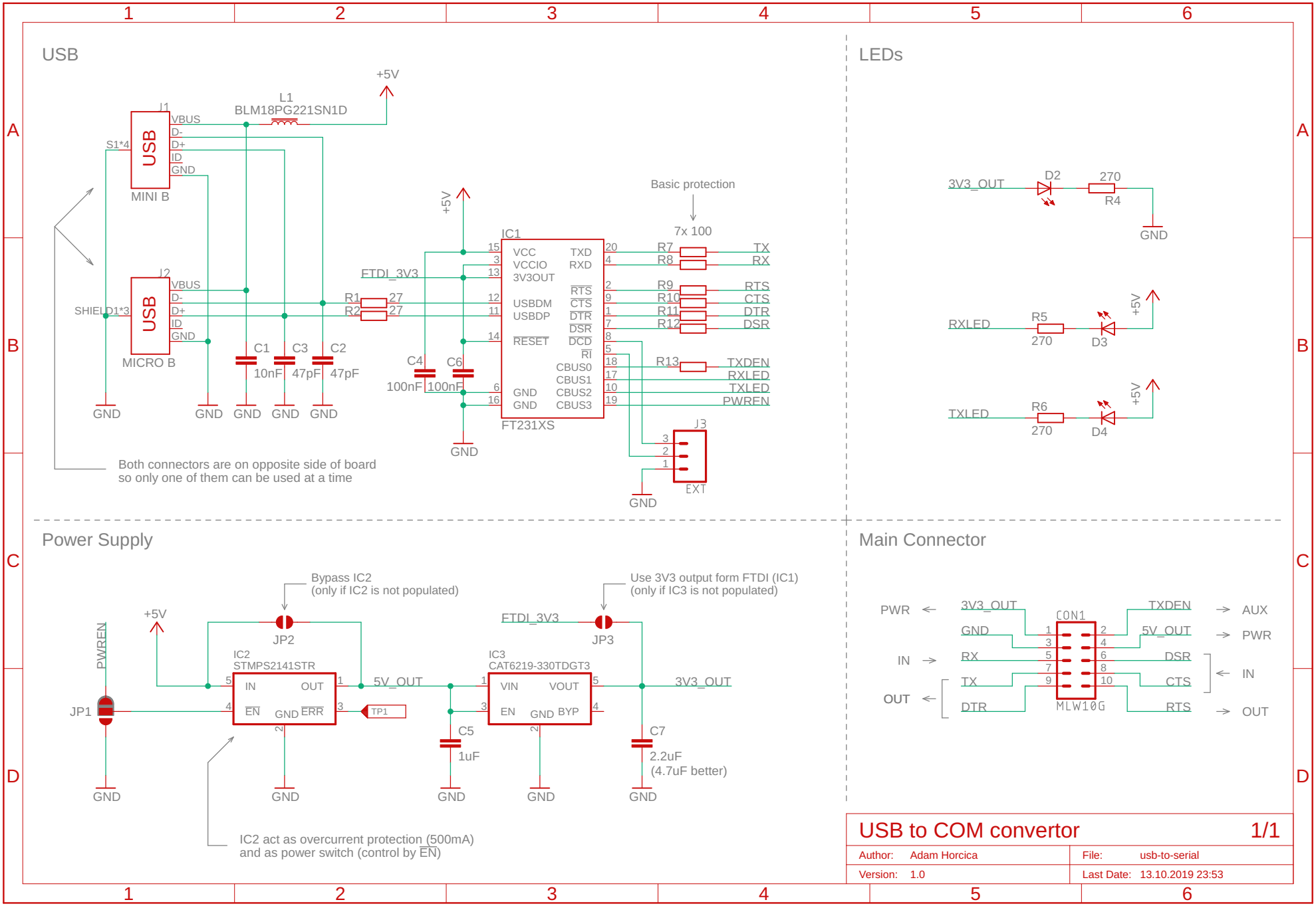
USB
+5V
L1
BLM18PG221SN1D
J1
USB
VBUS
D-
D+
ID
GND
S1*4
MINI B
J2
USB
VBUS
D-
D+
ID
GND
SHIELD1*3
MICRO B
GND
GND
GND
GND
GND
C1
10nF
C3
47pF
C2
47pF
FTDI_3V3
R1
27
R2
27
C4
100nF
C6
100nF
+5V
IC1
VCC
VCCIO
3V3OUT
USBDM
USBDP
RESET
TXD
RXD
RTS
CTS
DTR
DSR
DCD
RI
CBUS0
CBUS1
CBUS2
CBUS3
GND
GND
FT231XS
GND
Basic protection
7x 100
R7
R8
R9
R10
R11
R12
R13
TX
RX
RTS
CTS
DTR
DSR
TXDEN
RXLED
TXLED
PWREN
J3
EXT
GND
Both connectors are on opposite side of board
so only one of them can be used at a time
LEDs
3V3_OUT
D2
270
R4
GND
RXLED
R5
270
D3
+5V
TXLED
R6
270
D4
+5V
Power Supply
Bypass IC2
(only if IC2 is not populated)
JP2
+5V
PWREN
JP1
GND
IC2
STMPS2141STR
IN
OUT
EN
GND
ERR
TP1
GND
5V_OUT
C5
1uF
GND
FTDI_3V3
JP3
Use 3V3 output form FTDI (IC1)
(only if IC3 is not populated)
IC3
CAT6219-330TDGT3
VIN
VOUT
EN
GND
BYP
GND
3V3_OUT
C7
2.2uF
(4.7uF better)
GND
IC2 act as overcurrent protection (500mA)
and as power switch (control by EN)
Main Connector
CON1
MLW10G
PWR
3V3_OUT
GND
IN
RX
OUT
TX
DTR
TXDEN
5V_OUT
DSR
CTS
RTS
AUX
PWR
IN
OUT
USB to COM convertor
1/1
Author: Adam Horcica
File: usb-to-serial
Version: 1.0
Last Date: 13.10.2019 23:53