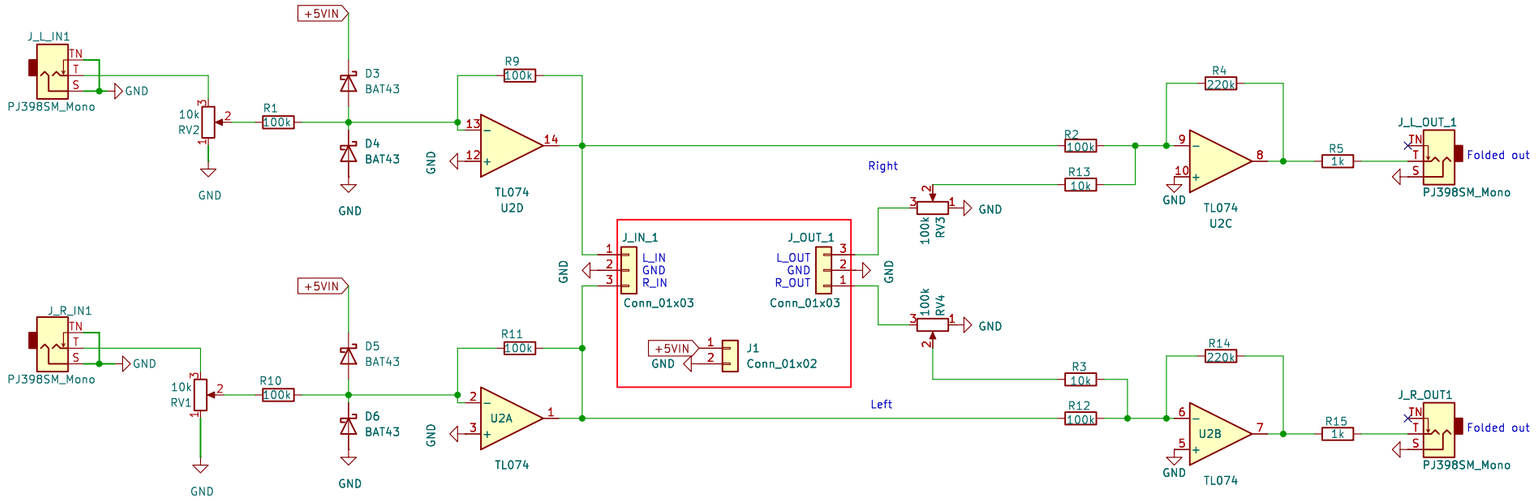

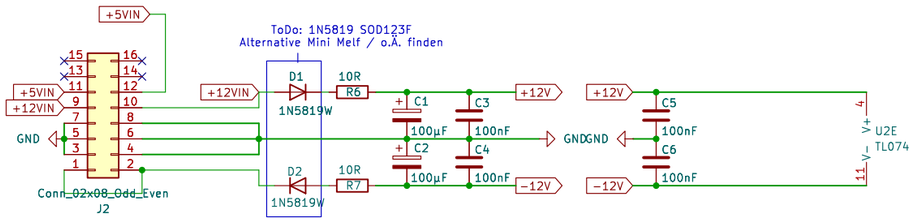

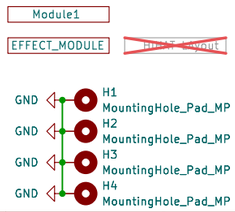


```
## DSP Effekt-Liste (0-99)

- 00-02: Small hall
- 03-05: Medium hall
- 06-08: Large hall
- 09:    Church
- 10-12: Small room
- 13-15: Medium room
- 16-18: Large room
- 19:    Hall
- 20-26: Metal acoustic reverb
- 27-29: Spring reverberation
- 30-35: Reverberation door
- 36-39: Reverse reverb
- 40-43: Early reflection
- 44-47: Atmosphere effect
- 48:    Stadium
- 49:    Ambient effect FX
- 50-58: Delay
- 59:    Echo
- 60-65: Chorus
- 66-69: Flange
- 70-73: Phase shift
- 74-79: Tone
- 80-81: Reverb + chorus
- 82-83: Reverb + chrome
- 84-85: Reverb + phase shift
- 86-87: Reverb + tone
- 88-89: Delay  + reverb
- 90:    Delay  + reverberation gate
- 91:    Delay  + reverse reverb
- 92-93: Delay  + chorus
- 94-95: Delay  + chrome
- 96-97: Delay  + phase shift
- 98-99: Delay  + transposition
```

Logo_1
Logo2

BatNoize / Stefan H

Sheet: /
File: LoFi_Effect_Module.kicad_sch

Title: Lo-Fi Effects

Size: A3	Date: 2026-03-13	Rev: 01
KiCad E.D.A. 8.0.9		Id: 1/1