Palestine Polytechnic University

College of Information Technology and Computer Systems Engineering
Department of Computer Systems Engineering

AutiSense: Smart Assistant System for Children with Autism Spectrum Disorder

Authors:

Batool Shaheen - 237010

Raghad Darabee - 237008

Supervised by:

Eng. Wael Altakrouri

To fulfill the requirements for a bachelor's degree in Computer Systems Engineering

2025-2026

Contents

Contents 1

List of Figures 3

List of Tables 4

List of Acronyms 5

Certification and Anti-Plagiarism Declaration 6

Abstract 7

1 Introduction 9
- 1.1 Preface . . . 9
- 1.2 Problem Statement . . . 9
- 1.3 Project Aims and Objectives . . . 10
- 1.4 Requirements . . . 10
  - 1.4.1 Functional Requirements . . . 10
  - 1.4.2 Non-Functional Requirements . . . 11
- 1.5 System Description . . . 11
- 1.6 Project Limitations/Constraints . . . 12
- 1.7 Schedule . . . 13
- 1.8 Report Outline . . . 13

2 THEORETICAL BACKGROUND 14
- 2.1 Preface . . . 14
- 2.2 Theoretical Background . . . 14
  - 2.2.1 Autism Spectrum Disorder (ASD): Definition and Classifications . . . 14
  - 2.2.2 Sensory Processing Difficulties in Autistic Children . . . 15
- 2.3 Literature Review . . . 17
  - 2.3.1 Preventing, Anticipating and Mitigating Off-Task Behavior in Special Needs Students . . . 17
  - 2.3.2 Empatica E4 Wristband . . . 18
  - 2.3.3 New Tool for Kids & People with Autism: The Gizmo Watch 3 - Adventure 18
- 2.4 Summary . . . 20

3 SYSTEM DESIGN 21
- 3.1 Preface . . . 21
- 3.2 System components and Design alternatives . . . 21
  - 3.2.1 Hardware Components . . . 21
- 3.3 Software Components and Design Alternatives . . . 30

3.3.1 Stress Detection 30
3.3.2 Communication Protocols 31
3.4 Conceptual system description 33
3.5 Algorithms and Methodologies 33
3.5.1 Stress Detection Pseudo Code 33
3.5.2 Interactive Screen Control Pseudo Code 34
3.5.3 Sequence diagram 35
3.6 Schematic diagram 36
3.7 Summary 37

4 Conclusion **38**
4.1 Summary 38
4.2 Conclusion 38

References **39**

Appendix **42**

List of Figures

1.1 System's Expected Structure 12

3.1 Random Forest 30
3.2 System conceptual diagram 33
3.3 System block diagram 33
3.4 Sequence diagram 35
3.5 Schematic diagram of wearable device 36
3.6 Schematic diagram of Interactive Screen 37

List of Tables

1.1 Project Timeline for the First Semester 13

2.1 Levels of Support in Autism Spectrum Disorder 16
2.2 Comparison of Sensory Processing Difficulties in Autistic Children 17
2.3 Comparison with other projects 19

3.1 Differences between ESP-WROOM-32, LilyPad Arduino, and Raspberry Pi Zero W 22
3.2 Differences between the Grove Galvanic Skin Response (GSR) sensor and Galvanic Skin Response (GSR) Shimmer3 sensor 23
3.3 Differences between the MAX30102 sensor and Pulse sensor 24
3.4 Differences between the MPU6050 sensor and ADXL335 sensor 25
3.5 Differences between the WS2812 NeoPixel Ring and APA102 26
3.6 Differences between Raspberry Pi 4B, NVIDIA Jetson Nano 27
3.7 Differences between standard LCD and TFT LCD. 28
3.8 Differences between USB Speaker and Bluetooth Speaker Module (MH-M28) 29
3.9 Differences between Communication protocols 32

List of Acronyms

ADXL335	Analog Devices Acceleromete
ASD	Autism Spectrum Disorder
BLE	Bluetooth Low Energy
BPM	heartbeats per minute
DMP	Digital Motion Processor
DSM	Diagnostic and Statistical Manual of Mental Disorders
EBD	Emotional Behavior Disorder
EDA	Electrodermal activity
GPU	Graphics Processing Unit
GSR	Galvanic Skin Response
HR	Heart Rate
HRV	Heart Rate Variability
I2C	Inter-Integrated Circuit
IDE	Integrated Development Environment
IDEA	Individuals with Disabilities Education Act
LCD	Liquid Crystal Display
MPU	Motion Processing Unit
MQTT	Message Queuing Telemetry Transport
PPG	Photoplethysmography
PWM	Pulse Width Modulation
SPI	Serial Peripheral Interface
SVM	Support Vector Machine
TFT LCD	Thin-Film Transistor Liquid Crystal Display
Wi-Fi	Wireless Networking Technology

Certification and Anti-Plagiarism Declaration

This is to declare that the graduation project produced under the supervision of Eng. Wael Altakrouri having the title “ AutiSense: Smart Assistant System for Children with Autism Spectrum Disorder” was prepared by student/s Batool Shaheen, Raghad Darabee below in partial fulfilment of the requirements for the degree of Bachelor in Engineering of Computer and no part hereof has been reproduced illegally (in particular: cut and paste) which can be considered as **Plagiarism**.

All referenced parts have been used to support and argue the idea and have been cited properly. I/We certify that I/we will not commit any plagiarism, cheating, or any other academic integrity
violation. I/We will be responsible and liable for any consequence if violation of this declaration is proven.

Any use of Artificial Intelligence (AI) tools in the preparation of this project has been clearly declared and documented in the related appendix at the end of the report, in accordance with the PPU guidelines.

Date: 16-8-2025.
Graduation project group's student(s): Batool Shaheen, Raghad Darabee.
Name: **Signature:**
Name: **Signature:**

Abstract

The project aims to design a wearable smart system that will help children with Autism Spectrum Disorder (ASD) manage stress and transitions. Knowing the need for real-time, personalized support, the system employs physiological sensors—including heart rate, galvanic skin response, and motion sensor—to detect early signs of emotional distress. A mobile application alerts the specialists, who can select calming interventions such as calming music, visual cues, and an LED countdown timer. An interactive display external to the wearer enables emotional regulation and task readiness using animation and auditory stimulation. The proposed design trail a promising, child-centered approach to developing emotional and behavioral self-regulation, creating an overall calmer and more constructive situation for autistic children.

Keywords: ASD, Real-Time Alert System, Wearable Device, Stress Detection, Task Transition, GSR Sensor, Heart Rate Monitoring.

الملخص

يهدف المشروع إلى تصميم نظام ذكي قابل للارتداء يساعد الأطفال المصابين باضطراب طيف التوحد (ASD) على إدارة التوتر وفترات الانتقال. مع إدراك الحاجة إلى دعم فوري وشخصي، يستخدم النظام مستشعرات فسيولوجية — بما في ذلك معدل ضربات القلب، واستجابة الجلد الجلفانية، و مستشعر الحركة — لاكتشاف العلامات المبكرة للضيق العاطفي. يقوم تطبيق على الهاتف المحمول بتنبيه المختصين، الذين يمكنهم اختيار تدخلات مهدئة مثل الموسيقى الهادئة، و الإشارات البصرية، مؤقت العد التنازلي باستخدام مصابيح LED. تتيح شاشة تفاعلية خارجية للطفل تنظيم انفعالاته والاستعداد للمهام من خلال الرسوم المتحركة والتحفيز السمعي.يقدم التصميم المقترح نهجًا واعدًا يركز على الطفل لتطوير التنظيم الذاتي العاطفي والسلوكي، مما يخلق بيئة أكثر هدوءًا وبناءً بشكل عام للأطفال المصابين بالتوحد.

الكلمات المفتاحية: اضطراب طيف التوحد، نظام التنبيه في الوقت الحقيقي، جهاز يمكن ارتداؤه، اكتشاف الإجهاد، انتقال المهام، استجابة الجلد الجلفانية، مراقبة معدل ضربات القلب.

Chapter 1

Introduction

1.1 Preface

The intelligent stress management for children with Autism Spectrum Disorder (ASD) is basically an on the spot personalized support, helping children through their emotional challenges and smoother task transitions. Autistic children become anxious and sometimes disengaged when facing some unexpected change or overwhelming situation, traditional methods like verbal cues or static routines just cannot suffice to meet the need at that very moment.

This system improves emotional well-being by recognizing early signs of stress and providing personalized support to help children stay calm and focused. Advanced monitoring and intervention methods assist children in developing improved adjustment skills that improve their daily social interactions and life quality. In addition, the use of structured visual instruction integration facilitates task execution and reducing anxiety and confusion. At the end, this project is an intriguing this is a tangible way to increase autonomy and build a more leveled, engaging community for autistic children.

1.2 Problem Statement

Children with ASD need support tailored to their needs, helping them express emotion and adjust to stress and transitions between activities. They should receive an immediate personalized intervention according to their needs so that they may be able to lead through activities in a calm transition and supportive environment.

Currently, most support systems use a static approach, bringing in elements such as verbal prompts, picture schedules, or set routines, which can sometimes fail to help when there is a sudden mood change. These negative changes often go unnoticed at first, gradually contributing to stress, frustration, or disengagement in emotions. Without visual cues for changes, transitions from one task to another can be so adversarial that it makes adjustments all the harder.

To overcome these difficulties, the proposed solution helps a smart system to identify early distress signs and intervene with customized real-time responses. Through the means of auditory prompting, sensory feedback, and interactive visual cues, the system stimulates an ambience that helps kids to regulate emotions, lower anxiety, and walk through everyday activities with more confidence and ease.

1.3 Project Aims and Objectives

In this project, we propose a system that aims to provide the following features:

1. The system aims to provide real-time emotional support for children with ASD to stress management and emotional self-regulation. In order to complete this aim, the following objectives should be achieved:
   (a) Develop a system that continuously monitors the child's emotional and physiological status.
   (b) Integrate feedback mechanisms (auditory, sensory, and visual) to provide immediate interventions based on detected stress levels.
   (c) Ensuring seamless system component level communication for real-time data exchange.
2. The system aims to provide personalized interventions based on the child's emotional and behavioral responses. In order to complete this aim, the following objectives should be achieved:
   (a) Use data analysis techniques for real-time prediction of emotional states and stress levels.
3. The system aims to improve task transitions and time management for children with ASD using visual and auditory tools. In order to complete this aim, the following objectives should be achieved:
   (a) Create a visual system that provides transition cues between activities to help children expect changes.
   (b) Provide calming auditory and visual cues during transitions. These cues are activated in response to the child's stress level and are managed by a specialist through a mobile application to ensure personalized and timely support during routine changes.

1.4 Requirements

To specify the system requirements, the following functional and non-functional requirements are considered:

1.4.1 Functional Requirements

The system must be able to:

1. Identify and track signs of emotional discomfort in autistic children.
2. Respond immediately through a variety of feedback mechanisms when stress is detected.
3. Include a structured method to help children transition between activities.
4. Collect and analyze user data to recognize behavioral patterns and improve actions taken by the system.
5. Enable specialists to receive stress alerts and remotely activate personalized interventions via a mobile application.
6. Operate in real-time, ensuring timely responses to events causing stress.

1.4.2 Non-Functional Requirements

1. **Reliability:** To minimize false positives and ensure correct actions, the system aims to achieve an accuracy of up to 90%.

2. **Response Time:** To provide immediate assistance, the system aims to respond within about 5 seconds.

3. **Usability:** Specialists should be able to easily navigate and use the system interface.

1.5 System Description

Our system is a wearable device can be worn on the child's hand. It is designed to help children with Autism Spectrum Disorder (ASD) regulate their emotions and manage transitions between tasks. The system consists of sensors and interactional components intended to detect early cues that something is troubling them and provide timely support.

The system consists of three subsystems, a wearable device, an Interactive screen, and mobile application. The wearable device has a heart rate monitor for sensing heart pulse rate and the system can determines heart rate change, a skin conductance sensor to sense the amount of sweat, which is considered an index of stress, and movement sensors that track abnormal movement patterns. All the sensors are reading data in real time, and this is being processed to recognize signs of emotional disturbance. When stress is detected, the system sends an alert that is sent out via a mobile application to the specialist or teacher in real time. Based on the child's current emotional state and needs, the specialist selects the appropriate calming intervention, such as activating soothing sounds with adjustable volume levels or modifying the intensity of visual feedback like screen brightness. This collaboration provides more specific and individualized regulation strategies, ensuring that assistance is tailored to the child's condition in real time.

To assist in transitioning between activities like transitioning between classes, daily tasks in the classroom, and individual activities to group or reverse activities. the wearable has an LED based countdown timer, which the specialist can configure remotely to help the child prepare for transitions between tasks. This is supplemented by an external interactive screen that can offer calming visual and auditory stimuli, including calming animations, or visually stimulating content to help with emotional regulation. With ongoing monitoring, adaptive feedback, and guided task based instruction, the device demands to impact emotional regulation and daily management routines for children with autism.

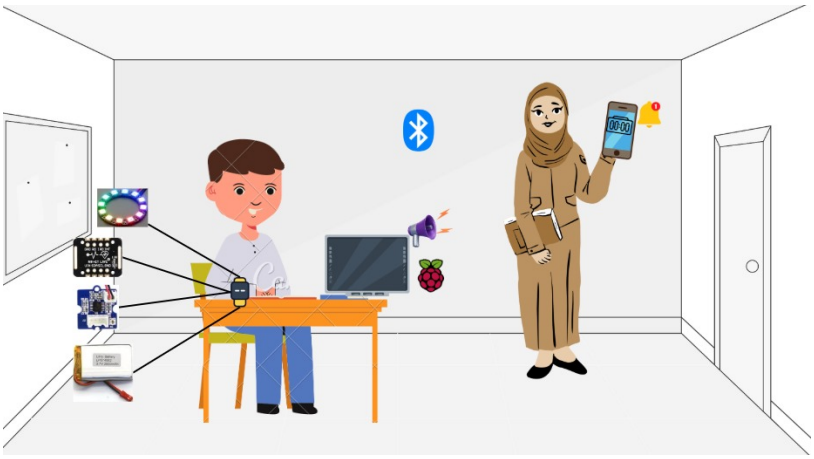

Figure 1.1: System's Expected Structure

1.6 Project Limitations/Constraints

1. **Cost Constraint:** Our system model will simulate real life situations for children with Autism Spectrum Disorder (ASD). The proposed solution is designed to simulate the type of support system we will need. However, it will be built using professional components, and the components will be a higher cost. Therefore, and because we are using expensive components we will design the prototype according to what is efficient for our model.

2. **Wireless Connectivity and Detection Range:** Communication among wearable device, mobile application for the specialists, and external interactive screen are conducted via wireless communications. Poor wireless communications signal or a child's movement out of range may interrupt communications between devices. Delay in alerts or calming interventions may be caused, hence lowering emotionally rehab's timely effectiveness.

3. **Power Limitations:** Since the wearable device runs on battery power, it needs regular recharging. If it isn't charged in time, the system could temporarily stop monitoring.

4. **Environmental Factors:** Environmental factors may affect sensor accuracy, including temperature, humidity, or background noise, which may lessen the reliability of stress detection in some situations.

5. **Adaptation Time:** The system requires time to adapt and personalize its responses. For autistic children, adaptation is crucial since they have to get used to wearing the system on their wrist.

1.7 Schedule

The tasks of the system implementation and operation are distributed along the first semester, summarized in Table 1.1.

Table 1.1: Project Timeline for the First Semester

Task / Week	**The First Semester**			
	1 - 4	**5 - 10**	**11 - 15**	**16 - 20**
Selection of Project Idea				
Collecting the Data				
System Design				
Documentation				

1.8 Report Outline

This report is organized as follows: Chapter 2: Provides an overview of definition and classifications for Autism, and sensory processing difficulties in Autistic children, along with a literature review that compares our project to similar ones. Chapter 3: Outlines the project's design, including both hardware and software aspects. It discusses design choices, the conceptual background of the software, the sequence diagram and presents a schematic diagram.

Chapter 2

THEORETICAL BACKGROUND

2.1 Preface

This chapter introduces the theoretical foundation essential to our project. Following this, we will conduct a literature review, comparing our project with previous works related to our work. This comparison will help highlight the unique aspects and innovations our project introduces. In summary, this chapter provides the necessary background to understand the origins of our project and its position within existing research.

2.2 Theoretical Background

This section provides an overview of definition and classifications for Autism, and sensory processing difficulties in Autistic children.

2.2.1 Autism Spectrum Disorder (ASD): Definition and Classifications

2.2.1.1 Definition

Autism is defined according to the Individuals with Disabilities Education Act (IDEA) as a developmental disability having a substantial effect on verbal and nonverbal communication and social interaction, with onset generally before age three, and which adversely affects a child's educational performance. It is often associated with repetitive behaviors, resistance to change, and unusual sensory responses. If a child shows these traits after age three but meets the criteria, they may still be diagnosed. Qualified professionals, such as psychiatrists or pediatricians, make the diagnosis [1].

2.2.1.2 Classifications

According to the Diagnostic and Statistical Manual of Mental Disorders, Fifth Edition (DSM-5), ASD is classified as a single diagnosis without subcategories (as opposed to DSM-4), and is further divided into three levels based on the level of support required [2].

Level 1: Requiring Support

The diagnosis of an individual with Level 1 Autism Spectrum Disorder (ASD) indicates the mildest form of autism. Individuals are typically verbal, able to form sentences, and engage in simple conversations. However, the above could not be expected to prompt or sustain social interaction, and could be expected to have difficulty with understanding social cues or engaging in small talk. They may not find it easy to initiate or sustain close friendships. They may be uncomfortable or anxious because of a change of routine or transition from one task to another. Although they are mostly

independent in many places, they still require support, especially in social situations, to manage their interactions and adapt to changes effectively [2].

Level 2: Requiring Substantial Support

The diagnosis of an individual with Level 2 Autism Spectrum Disorder (ASD) has much more severe communication and social deficits than Level 1. Individuals at this level often have problems with both verbal and non-verbal communication, and show much more repetitive behaviors such as flapping, rocking, and skin picking. These behaviors can affect daily work or social operations. Such individuals also have difficulties in adjusting to changes in routine and thus require intensive support in many life areas, including academic, occupational, and social contexts. A principle applied to these behaviors has to be in the best interests of the individual with autism [2].

Level 3: Requiring Very Substantial Support

The diagnosis of an individual with Level 3 Autism Spectrum Disorder (ASD) require very substantial support, as they tend to be the most affected by the condition. They tend to have severe communication difficulties, with limited or no verbal skills and little tendency to respond to social cues or others attempts at making contact. People at this level tend to engage in strong and repetitive behaviors and have extreme difficulty handling changes or alterations in routine; they may exhibit meltdowns, aggression, or self-injury at times and require almost constant supervision and interventions. Because of the immediacy of the effect experienced in nearly all areas of life, people with Level 3 autism need broad and comprehensive support throughout life-in-home, school, health care, and the community [2].

2.2.2 Sensory Processing Difficulties in Autistic Children

Children with Autism Spectrum Disorder (ASD) tend to have Sensory Processing Difficulty (SPD), which influences how they perceive and react to sensory input. Their challenges will be different from one child to another but typically emerge as one or more of the following:

1. **Tactile Defensiveness (Hypersensitivity to Touch)**

   Some children with autism are hypersensitive to touch, and even slight contact—such as seams in clothes, wristbands, or nubby fabrics—can be uncomfortable, irritating, or even painful. This sensitivity, known as tactile defensiveness, is one of the most critical considerations in wearable system design.

   To address this challenge, it is essential to employ soft, breathable, hypoallergenic materials in any wearable component, and to render the device light, pliable, and easy to adjust. However, comfort may not suffice to guarantee effective adoption.

   Kientz et al. (2020) investigated how autistic children perceive wearing a smartwatch. Some children tolerated the smartwatch after receiving simple verbal guidance, but others initially refused it due to discomfort. Interestingly, the study demonstrated the effectiveness of their method, which was based on visual schedules with video modeling that visually broke down the process of wearing the watch into small, manageable steps. This gradually increased tolerance: 62.5% of the participants (5 out of 8) later wore the smartwatch comfortably while also engaging in related activities [3].

   This suggests that gradual, structured exposure can reduce tactile defensiveness, improving acceptance of wearables in children with ASD. Moreover, material selection and introduction

Table 2.1: Levels of Support in Autism Spectrum Disorder

Feature	**Level 1** (Requires Support)	**Level 2** (Requires Substantial Support)	**Level 3** (Requires Very Substantial Support)
Support Needed	Some support	Substantial support	Very substantial support
Language & Communication	Can speak, mild difficulties	Noticeable challenges	May be nonverbal or limited verbal communication
Social Interaction	Difficulty with casual conversation and friendships	Difficulty with understanding social cues	Severe impairment in social engagement
Repetitive Behaviors	Present but less intense	Frequent, may disrupt daily functioning	Intense, persistent, may be harmful
Independence	Largely independent	Needs regular assistance	Requires constant supervision
Response to Change	Discomfort with change	Resistance to change	Strong resistance and distress

strategies significantly influence successful adoption, emphasizing their impact on intervention approaches.

2. **Hypo-responsiveness (Under-Responsiveness)**

   Some ASD children do not react much to physical stimulation. They will not notice a watch on their wrist, may not register important notifications (e.g., vibrations), or will not sense discomfort due to an incorrectly fitting device. In these cases, it is helpful to add multi-sensory feedback (e.g., visual notification, light vibration, or audio notification) to make the device more noticeable and effective.

3. **Sensory Seeking Behaviors**

   Unlike defensiveness, other children actively seek out sensory input. They might like to make physical contact, touch, or move and might even find the watch soothing or stimulating. For these children, wearables can be developed with self-regulating calming sensory feedback, such as vibrations, smooth texture, or visual animations.

Table 2.2: Comparison of Sensory Processing Difficulties in Autistic Children [4].

Category	Common Behaviors	Real-life Examples	Support Strategies
Over-Responsiveness	• Pain from light touch. • Dislike of certain fabrics. • Hair washing difficulties. • Food texture sensitivity.	• Refuses tight clothing. • Cries when head is touched. • Eats limited foods.	• Warn before touching • Remove clothing labels • Gradual texture exposure using soft tools
Under-Responsiveness	• High pain threshold • Doesn't notice food in mouth • Chews on non-food items • Seeks deep pressure	• Hugs too tightly • Bites or hits self • Loves heavy blankets	• Provide safe chew alternatives • Use weighted items • Offer structured sensory activities
Sensory Seeking	• Rubs textures • Seeks vibrations • Enjoys spinning or movement	• Touches walls frequently • Jumps or spins constantly • Craves tight hugs	• Provide sensory-rich toys • Integrate vibration safely • Include sensory input in routines

2.3 Literature Review

Recent projects have explored wearable and assistive technologies to support autistic children, focusing on stress detection, communication, and behavior management. This section reviews key examples from past work to compare their features and limitations with our proposed system.

2.3.1 Preventing, Anticipating and Mitigating Off-Task Behavior in Special Needs Students

Authors in this work [5] aimed to help children with transitioning difficulties related to Autism Spectrum Disorder (ASD) or Emotional Behavior Disorder (EBD) in transitioning from one school activity to another while reducing the occurrence of off-task behaviors that may interfere with learning. The project includes the implementation of a wearable sensor system, which has the Atmega328P microcontroller programmed via Arduino Integrated Development Environment (IDE), meant to collect physiological markers-stress symptoms in terms of heart rate, temperature, and sweating. It incorporates an LED-based countdown timer for upcoming changes and a touchscreen device for giving students calming activities intended to help them handle sensory overload. The project created an effective operational system that real-time-notifies teachers so the pupils would have early intervention; however, challenges include sensor accuracy, as sometimes readings are affected by the environment, and how to engage the interactive device yet prevent distraction from learning. It also needs further study regarding which way should LED countdown be set-on a period basis or time basis. With all these challenges, this project will establish a very good basis to improve the classroom experience for children with ASD and EBD.

2.3.2 Empatica E4 Wristband

The authors in [6] describe the E4 as a wearable physiological monitoring device designed for continuous, real-time health monitoring in medical and research applications. It provides non-invasive measurement of significant physiological signals including electrodermal activity (EDA), heart rate variability (HRV), skin temperature, and motion activity, and is therefore applicable to the study of stress, emotional responses, neurological diseases, and well-being. With the utilization of advanced biosensors such as photoplethysmography (PPG), infrared thermopile, 3-axis accelerometer, and Bluetooth, the device enables real-time data streaming and cloud-based analysis through Empatica's software platforms. The E4 has widely been used in science research and clinical trials, offering high-quality physiological data for mental illness, sleep research, and stress monitoring. However, costs are high ($1,690), short battery life, and reduced EDA consistency, which are disadvantages in part for this. It has also been discontinued. However, it has made a really good contribution to the strides made in wearable health monitoring, and lays the foundation for innovations in biometric tracking in the future.

2.3.3 New Tool for Kids & People with Autism: The Gizmo Watch 3 - Adventure

The authors in [7] introduced the Gizmo Watch 3 has been introduced by Verizon and the Autism Society of America for building independence, communication, and security for children and individuals with Autism. Now, the smartwatches boast of GPS tracking and geofencing for reporting location in real-time monitoring, voice-to-text messaging, programmable timers, and reminders for giving a soft touch to everyday activity routines. They are really programmed to encourage a kid's physical activity by step counting and jumping, even offering special games designed for neurodivergent kids. They have shown a lot of potential to make quite an impact on the management of routine activities, safety, and certainly controlled communication through a sturdy design for rough handling. One such hitch, however, is discomfort for sensory-sensitive children and rather limited texting for older users too, requiring more advanced tools for communication. On neither of these counts can Gizmo Watch 3 be considered a medical device. Children with Autism can use such smart applications for the relevant purposes of building structured independence, safety, and an engaging but user-friendly way of living.

A summary of the comparison is presented in Table 2.3 .

Table 2.3: Comparison with other projects

Feature	**Preventing Anticipating & Mitigating Off-Task Behavior in Special Needs Students**	**Empatica E4 Wristband**	**The Gizmo Watch 3 - Adventure**	**Our Project**
Device Type	Wearable + Interactive Screen	Medical-grade wristband	Smartwatch for kids	Wearable wristband + external interactive screen
Target Group	Children with ASD or EBD	Patients, research subjects	Children with Autism	Children with Autism Spectrum Disorder
Main Goals	Reduce off-task behaviors and ease activity transitions	Continuous physiological monitoring for stress and health	Promote independence, safety, and communication	Provide real-time emotional support and smoother task transitions
Sensor Types	Heart rate, temperature, sweat (stress indicators)	EDA, HRV, temperature, accelerometer	Basic motion sensor	Heart rate, sweat (EDA), motion sensors
Limitations	Environmental sensor sensitivity, possible distraction	Very high cost, short battery life, discontinued	Not a medical device, limited texting, may irritate sensory-sensitive kids	Cost, Bluetooth range, battery, environment, adaptation time
Cost	$40–80 (prototype-based)	$1,690	$150 (device only)	To be determined later

Unlike past projects concentrating on monitoring or basic alerts, Our system integrates real-time emotional detection with guided professional support.It includes a wearable wristband equipped with GSR and heart rate sensors to monitor stress indicators, and an external interactive screen where the specialist can display calming visuals and auditory cues relevant to the child's current emotional state. The system involves the specialist in interpreting information and giving the most appropriate response, rendering the support sensitive to the sensory profile of every child. A visual countdown through an LED ring helps to facilitate transitions between tasks, with the system being cost effective, school friendly, and easily adaptable to the specific needs of autistic children. This adaptive integration of feedback, real time data, and human intervention distinctly separates our project from existing solutions.

2.4 Summary

In this chapter, we presented the theoretical background needed to understand the key aspects of our project, i.e., stress detection, machine learning, real-time processing of data, decision-making algorithms, and HCI guidelines. We also conducted a literature review where we compared our system with similar existing projects. The comparison outlines how our project stands out by merging real-time emotional detection with interactive, personalized support through both a wearable device and an external screen, especially for children with autism.

Chapter 3

SYSTEM DESIGN

3.1 Preface

This chapter provides an overview of the necessary hardware and software components intended for our project. It explores various options for each component, presents a conceptual description of the system, and launches a general block diagram. Additionally, the chapter delves into system algorithms and methodologies through the use of flowcharts. Schematic diagrams depict the interactions and interfaces between components.

3.2 System components and Design alternatives

This part describes the hardware and software components and their design alternatives.

3.2.1 Hardware Components

3.2.1.1 Wearable Device

The wearable unit is responsible for detecting physiological stress signs from the child, processing them, and providing sensory feedback.

3.2.1.1.1 Microcontroller

The microcontroller is a main component in the wearable device, which collects physiological data from sensors and controls feedback output such as visual cues. There are three available options for the microcontroller ESP-WROOM-32, LilyPad Arduino, and Raspberry Pi Zero W to choose from shown in Table 3.1.

Table 3.1: Differences between ESP-WROOM-32, LilyPad Arduino, and Raspberry Pi Zero W

Characteristic	**ESP-WROOM-32 [8]**	**LilyPad Arduino [9]**	**Raspberry Pi Zero W [10]**
Image		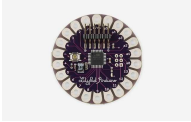	
RAM	520KB SRAM	1KB SRAM	512MB
Clock Speed	Up to 240MHz	8 MHz	1GHz
Storage	Up to 16MB Flash	16 KB	microSD
Dimensions (L x W x H) mm	(18mm × 25.5mm × 2.8mm) [11]	approximately 50mm diameter, height 4.5mm	(65mm × 30mm × 13mm)
Connectivity	WiFi, Bluetooth	No built-in WiFi/Bluetooth	WiFi, Bluetooth
Price	starts from around $4	starts from $1 – $3 [12]	from $35 – $75
Operating Voltage	3.0V–3.3V	2.7V–5.5V	5V via micro-USB

The ESP-WROOM- 32 was chosen because it's speed, large memory and built-in WiFi/Bluetooth, making it ideal for real-time sensor data processing and wireless communication in the wearable system.

3.2.1.1.2 Skin Conductance Sensors

Skin conductance is a standard psychophysiological measurement procedure, often referred to as Electrodermal Activity (EDA). It is used as an index of the activity of the sympathetic nervous system, whose role is to generate the body's response, a physiological response triggered by emotionally arousing or stressful stimuli.

This response increases sweat gland activity, particularly in areas with a high density of sweat glands, such as the fingers and palms. As emotional or psychological arousal rises, such as during stress or anxiety, the skin's ability to conduct electricity improves due to the increased sweat production [13]. During stress, the resistance of the skin drops due to increased secretion in the sweating glands [14]. There are two available options for skin conductance sensors to choose from shown in Table 3.2.

Table 3.2: Differences between the Grove Galvanic Skin Response (GSR) sensor and Galvanic Skin Response (GSR) Shimmer3 sensor

Characteristic	**Grove GSR [15]**	**GSR Shimmer3 [16]**
Image	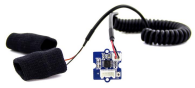	
Price	≈ $60–$70	≈ $570
Power Supply	Operates at 3.3V / 5V	Rechargeable 450mAh Li-ion battery + Bluetooth
Connectivity	Wired (analog output)	Wireless via Bluetooth / USB / SD card
Size & Weight	Very small and lightweight	Small size, lightweight (28g)

The Grove GSR sensor was chosen due to its affordable price, simple integration process, and compatibility with low-power wearable systems. While premium options like the Shimmer3 GSR offer advanced features and medical-grade precision, the Grove GSR provides enough data resolution for detecting stress related physiological changes, which is the main requirement of the system. Additionally, its compact size and minimal energy requirements make it ideal for embedding within a lightweight wearable device.

3.2.1.1.3 Heart Rate Sensor

A heart rate sensor is used to monitor the number of heartbeats per minute (BPM). It provides valuable data into a person's physiological and emotional state, especially in response to stress, anxiety, or physical activity. In wearable health devices, heart rate monitoring helps in detecting abnormal patterns, and assessing stress levels.There are two available options for heart rate sensors to choose from shown in Table 3.3.

Table 3.3: Differences between the MAX30102 sensor and Pulse sensor

Characteristic	MAX30102 [17]	Pulse Sensor [18]
Image	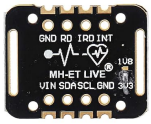	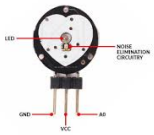
Price	Starts from $7	Starts from $1
Output Type	Digital signal (data stream over I2C)	Analog voltage (pulse waveform)
Type of Measurement	Digital biosensor with SpO_2 + HR detection	Analog optical heart rate sensor
Detection Method	Optical reflection (PPG) with dual-wavelength absorption	Optical reflection (PPG) with single wavelength
Power Control	Software-controllable (can be turned off)	Always on when powered
Pin Count	7 pins (VIN, GND, SCL, SDA, INT, RD, IRD)	3 pins (VCC, GND, A0)
Weight	20g	Very lightweight

The MAX30102 sensor module was chosen for this project due to its high accuracy and ability to capture both heart rates and blood Oxygen saturation (SpO2). The physiological signals formed by these parameters are among the prime indicators of stress and emotional states, which correspond directly to the goal of the system, that is, to monitor emotional response in children. MAX30102 differs from other ordinary pulse sensors in having superior noise rejection and ambient light suppression, thus being qualified for wearable applications where reliability and accuracy are crucial.

3.2.1.1.4 Motion Sensor ((MPU6050), (ADXL335))

A motion sensor can be used to track the movement, position, or rotation of the body. It is important in monitoring systems such as wearables because it tracks the level of activity, identifies normal and abnormal repetitive motions, as well as differentiates between stress and usual physical responses.There are two available options for motion sensors to choose from shown in Table 3.4.

Table 3.4: Differences between the MPU6050 sensor and ADXL335 sensor

Characteristic	**MPU6050 [19]**	**ADXL335 [20]**
Image	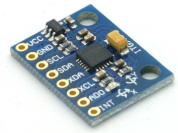	
Price	Starts from $3–5	Starts from $4–6
Sensor Type	Digital Accelerometer + Gyroscope	Analog Accelerometer
Axis	6 (Accel + Gyro)	3 (X, Y, Z)

The MPU6050 was chosen for this project because it combines a 3-axis accelerometer, 3-axis gyroscope, and an embedded Digital Motion Processor (DMP) in a compact, low-power module.This sensor provides acceleration, orientation, and angular velocity data in all dimensions, making it highly accurate in motion tracking. These motion parameters are essential for detecting physical behaviors and movement patterns that are often stressed in fragile groups of non-aggressive children with autism, such as repeated motions or certain unusual postures of the body.

3.2.1.1.5 Display

An addressable LED strip is used as a visual countdown timer to support emotional self-regulation for children with autism. The LED strip is a non-verbal and intuitive method to indicate time duration, such as for breaks and transitions. The LED strip offers both flexibility in visual design and a strong sensory impact, which can help reduce anxiety during routine changes. There are two available options for LED strips to choose from shown in Table 3.5.

Table 3.5: Differences between the WS2812 NeoPixel Ring and APA102

Characteristic	**WS2812 NeoPixel Ring [21]**	**APA102 [21]**
Image		
PWM Resolution	8-bit (256 levels)	8-bit (256 levels)
PWM Frequency	400 Hz	20 KHz
Type	RGB 5050 Pixel	RGB 5050 or 2020 (Dotstar Micro) Pixel
Data Rate	800 Kbps	less than 4 Mbps

The WS2812 NeoPixel Ring was chosen for this project because of its simple integration and for being easily suited for visual feedback applications. It requires only one data line, fully complies with the ESP-WROOM-32 microcontroller, which is going to be used in the project, and prompts bright, individually addressable RGB LEDs [21].

3.2.1.1.6 Battery

For this project, a Lithium-Ion (Li-ion) battery was selected due to its superior energy density, safety profile, and cycle longevity, which are critical for wearable and healthcare-related applications.

3.2.1.2 Interactive Screen

Interactive screen is used to present calming audio and visual content to the child under stressful emotional conditions. The screen is also used as a feedback system associated with the wearable device, and it processes incoming data received and responds accordingly.

3.2.1.2.1 Microcontroller

The microcontroller of the interactive screen takes input in the form of processed physiological data from the wearable device and displays appropriate visual, auditory, or multimedia data depending upon the emotional state of the child. There are two available options for microcontrollers to choose from shown in Table 3.6.

Table 3.6: Differences between Raspberry Pi 4B, NVIDIA Jetson Nano

Characteristic	**Raspberry Pi 4B**	**NVIDIA Jetson Nano [22]**
Image		
RAM	2GB / 4GB / 8GB	4GB
Clock Speed	1.5GHz	1.43GHz
Connectivity	Built-in WiFi / Bluetooth / Ethernet	Ethernet only
Dimensions (mm)	85.6 x 56.5	100 x 80
GPU	Broadcom VideoCore VI	128-core Maxwell GPU
Price	Starts from $60 [23]	Starts from $99 [24]

Raspberry Pi 4B is selected as the main microcontroller of the interactive screen because of the community support it has gathered, multimedia capabilities, and built-in wireless connectivity. Compared to Jetson Nano, it already comes autonomous with WiFi and Bluetooth, thus simplifying communication with the wearable device. The Raspberry Pi 4B also features sufficient processing power and RAM to support real-time video and multimedia content required to calm down the child. Its compact nature, lowered price, and ease to develop render it ideal for use in assistive wearable technology projects like the current one.

3.2.1.2.2 Display

The display function of the interactive screen is among the main parts tasked with displaying comforting images to the child as animation, pictures, or simple games. In addition, when emotionally upset, the child is encouraged to work on the screen directly by means of drawings or scribbles, which may be used as an expressiveness tool to alleviate stress. Hence, display responsiveness and touch are inherent elements.There are two available options for display to choose from shown in Table 3.7.

Table 3.7: Differences between standard LCD and TFT LCD.

Characteristic	**Standard LCD**	**TFT LCD**
Image		
Color Display	Typically monochrome or limited color	Full color
Brightness	Low to moderate	High brightness with backlight
Viewing Angle	Narrow	Wide viewing angle
Refresh Rate	Slow (suitable for static images/text)	Fast (supports animations and videos)
Touchscreen Support	Rare or not supported	Widely available with resistive/capacitive options
Power Consumption	Low	Moderate
Image Quality	Basic	High resolution and sharpness
Response Time	Slow	Fast
Cost	$\approx$ \$2 [25]	$\approx$ \$7 [26]
Interface Options	Parallel or serial (limited compatibility)	SPI, I2C, and parallel (well-supported by ESP32)

TFT LCD was chosen for the ability to display colorful, reactive images and respond to touch, which is necessary for soothing and captivating the child. It can be used for scribbling or drawing when the child is upset, offering a healthy outlet. Unlike standard LCDs, TFT screens provide better brightness, viewing angles, and faster refresh rates, making them ideal for animations and content. Despite slightly higher power use, their benefits in usability and expressiveness make TFT LCD the best fit for this project.

3.2.1.2.3 Speaker

The speaker component is essential in offering auditory feedback to the child during emotional distress. The feedback may be soothing music, calm nature, or simple audio messages. Choosing a speaker that will offer clear, pleasant, and non-intrusive sounds is critical, especially for children with autism, who are sound-sensitive.There are two available options for speakers to choose from shown in Table 3.8.

Table 3.8: Differences between USB Speaker and Bluetooth Speaker Module (MH-M28)

Characteristic	**USB Speaker**	**Bluetooth Speaker Module (MH-M28)**
Image		
Audio Type	Digital audio via USB	Wireless audio via Bluetooth
Playback Quality	High quality, stable	High quality, stable sound
Integration	Requires USB host support	Easy pairing with phones or microcontrollers
Control Method	Controlled by USB host (e.g., Raspberry Pi)	Controlled by paired Bluetooth device
Power Consumption	Moderate to high	Moderate
Connectivity	Wired (USB)	Wireless (Bluetooth)
Price	≈ $14 [27]	≈ $7 [28]

The USB Speaker was chosen due to its wired connection that is stable, sound output of good quality, and suitability for devices like Raspberry Pi or similar controllers that can be used as a USB host. It can be ideal in offering stable audio feedback with no chance of wireless module pairing

issues. It is simple and rugged, thus ideal for use in children with Autism Spectrum Disorder stress management systems.

3.3 Software Components and Design Alternatives

This part explains the main software components of the Smart Assistant System for Children with Autism, compares possible design choices, and justifies the selected options based on project requirements.

3.3.1 Stress Detection

The stress detection is the system's core, determining if the child is under stress. This detection is essential for alerting specialists and for triggering the feedback mechanisms, be it visual or auditory. The system continuously collects data and analyzes it from the Galvanic Skin Response sensor (GSR), Heart Rate sensor (HR), and Motion sensor sensor, HR sensor, and Motion sensor to classify an emotional state of the child. This detection has to be efficient and reliable in decision making. So, we have listed different options to use as a detector.

3.3.1.1 Support Vector Machine (SVM)

SVMs are a set of supervised learning methods used for classification, regression and outlier detection [29]. SVMs are common tools for classification. They find the hyperplane that best separates different classes in a high-dimensional space. By training an SVM model with labeled physiological data, it can learn variations existing between emotional states, thus making the SVM most effective in multi-class classification problems. In our project, SVMs can be used to determine whether physiological response occurs because of stress or due to physical activity, thus providing greater reliability to the stress detection system [30].

3.3.1.2 Random Forest

Random Forests are groups of decision trees that work together to make a final prediction. Each tree tries to classify independently, with the result finally depending on majority voting between all the trees [31], as shown in Figure 3.1. The algorithm is implemented in this project for the classification of children's emotional states into "stressed" or "relaxed" using physiological sensor data. Each decision tree looks at only a subset of data and makes a vote toward the final prediction.

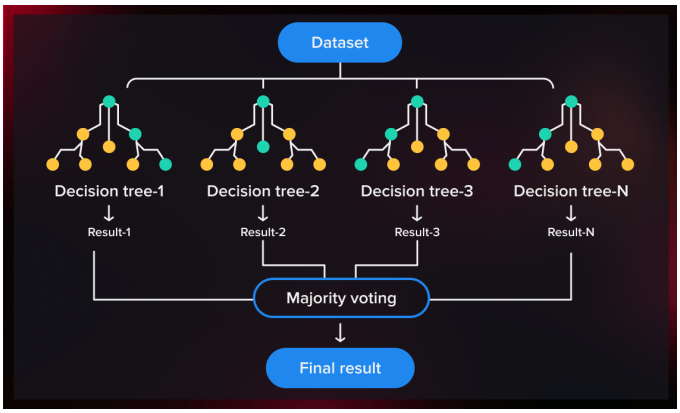

Figure 3.1: Random Forest [32]

Our choice of the algorithm to be used for stress detection is the Random Forest algorithm instead of Support Vector Machine (SVM) because SVM requires extensive parameter tuning and may not scale efficiently with high-dimensional, non-linear physiological data. In contrast, Random Forest being an ensemble method performs better with complex data, is more robust to noise, and requires minimal parameter optimization [33].

3.3.2 Communication Protocols

In our project, we define protocols between different system components for communication and data interchange. The protocols allow system integration and operability. The protocols include Wi-Fi that enables a fast wireless network for data transfer, BLE for short-range wearable communication, and MQTT which is a lightweight messaging protocol for device updates as described in Table 3.9 to help selection based on project needs and limitations. Their particular characteristics are provided to support decisions.

Additionally, since our system includes a mobile app for specialists, the selected protocols must integrate seamlessly with the application development environment. The app will be developed using React Native to support both Android and iOS devices.

Table 3.9: Differences between Communication protocols

Feature	**BLE [34]**	**Wi-Fi [35]**	**MQTT [36]**
Type	Short-range Wireless Communication	High speed Wireless Networking	Publish-Subscribe Protocol (Application Layer)
Use Case	Communication between wearable device and mobile app	Data transfer between mobile app and interactive display	IoT messaging, notifications, sensor updates
Connection Type	Intermittent (low duty cycle)	Persistent (infrastructure or P2P)	Persistent (broker-based)
Reliability	Medium (depends on interference and environment)	High (reliable via TCP/IP)	High (QoS levels 0, 1, 2)
Overhead	Low	High (due to TCP/IP stack)	Low
Power Usage	Very low	High	Low
Range	10–100 meters	Up to 100 meters	Depends on network (typically local/Wi-Fi coverage)
Latency	Low	Moderate	Very Low (ideal for real-time alerts)

For our project, we choose Wi-Fi and BLE. Short-range communication to mobile apps from wearables is provided by BLE and is ideal for sensors, because of its low power consumption. Wi-Fi connectivity allows for stable and fast data transfer between the interactive display and mobile app. Both options offer a suitable mix of efficiency, performance and connectivity.

3.4 Conceptual system description

The conceptual system design here and the system block diagram in the next figure integrate multiple physiological sensors (Grove galvanic skin response, Heart Rate, Motion) for data collection, a ESP-WROOM- 32 processing unit to detect stress. a LED ring is used as a timer for transition between activities and the specialist can set the time for activity. It will send notifications to a specialist's mobile app when it detects stress. The specialist then uses an interactive screen with audio-visual feedback to provide calming interventions for the child's sensory sensitivities.

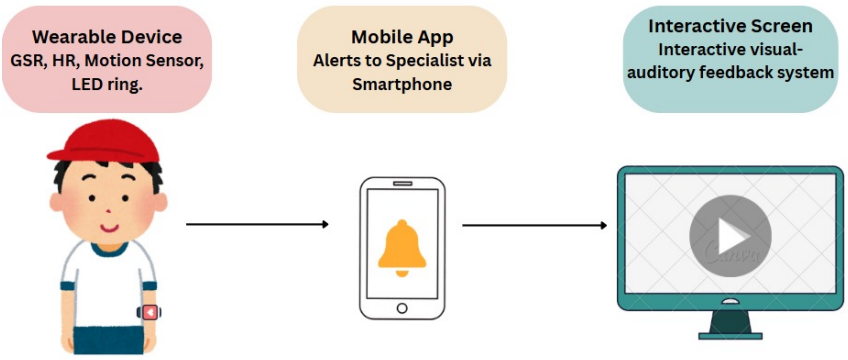

Figure 3.2: System conceptual diagram

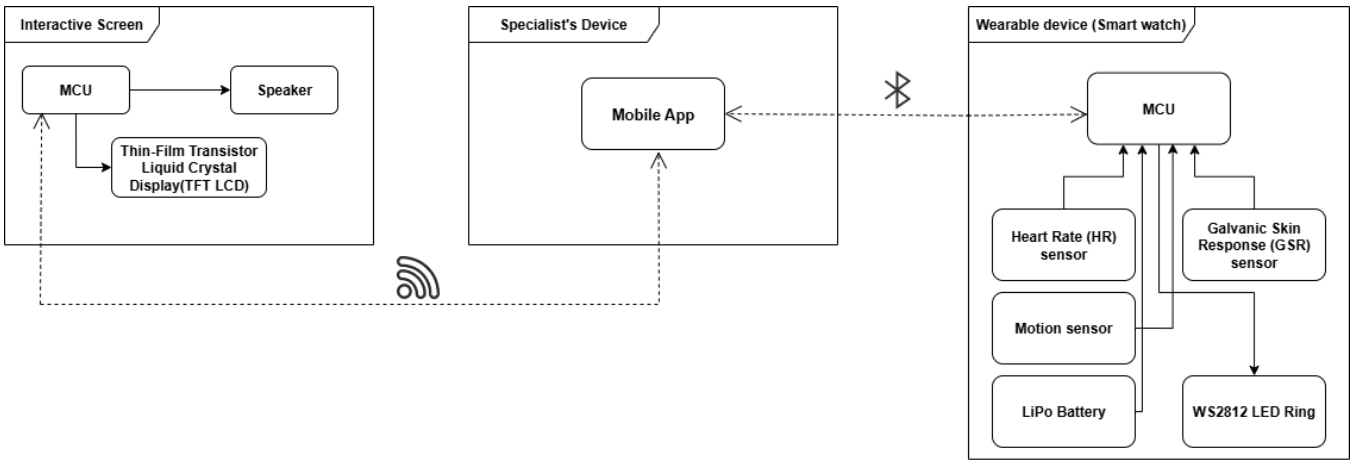

Figure 3.3: System block diagram

3.5 Algorithms and Methodologies

3.5.1 Stress Detection Pseudo Code

This pseudo code defines the detection of stress using physiological sensors,to distinguish between physical exercise and emotional stress, physiological signals Heart Rate (HR) and Galvanic Skin Response (GSR) are processed together with motion sensor signals. Stress is identified only when physiological signals are high with little physical movement. This helps avoid false positives due to exercise or play.

Pseudo Code for Stress Detection

```
gsr = readGSR()
hr = readHeartRate()
motion = readMotionLevel()
if motion < motion_threshold:
    # Low motion: More likely to be emotional stress
    if gsr > GSR_threshold and hr > HR_threshold:
        stress_level = "High"
    elif gsr > GSR_threshold:
        stress_level = "Medium"
    else:
        stress_level = "Normal"
else:
    features = extractFeatures(gsr, hr, motion)
    stress_level = predictWithRandomForest(features)
```

3.5.2 Interactive Screen Control Pseudo Code

The following pseudo code outlines the core workflow of the Interactive Screen subsystem. After the specialist receives a stress alert via the mobile application, they can directly use the screen's touch interface to adjust brightness, audio, and visual content, or control from mobile application.

Pseudo Code for Interactive Screen Control

```
event = receive_event()

# Use touch screens to adjust brightness, audio, and visual content
if event == "TOUCH_INPUT":
    open_control_menu()
    apply_changes_from_touch()

# Manual control command from mobile app
if event == "ADJUST_FEEDBACK":
    set_brightness(value)
    set_audio_volume(value)
    show_animation(content_id)

# Stop all interventions (via touch or app)
if event == "STOP_FEEDBACK":
    stop_audio()
    reset_brightness()
    clear_screen()
```

3.5.3 Sequence diagram

The sequence diagram shows the stress detection system and support task transitions , it shows the flow from detecting the stress signs from the sensors in the wearable device to alerting the specialist to take the suitable decision.

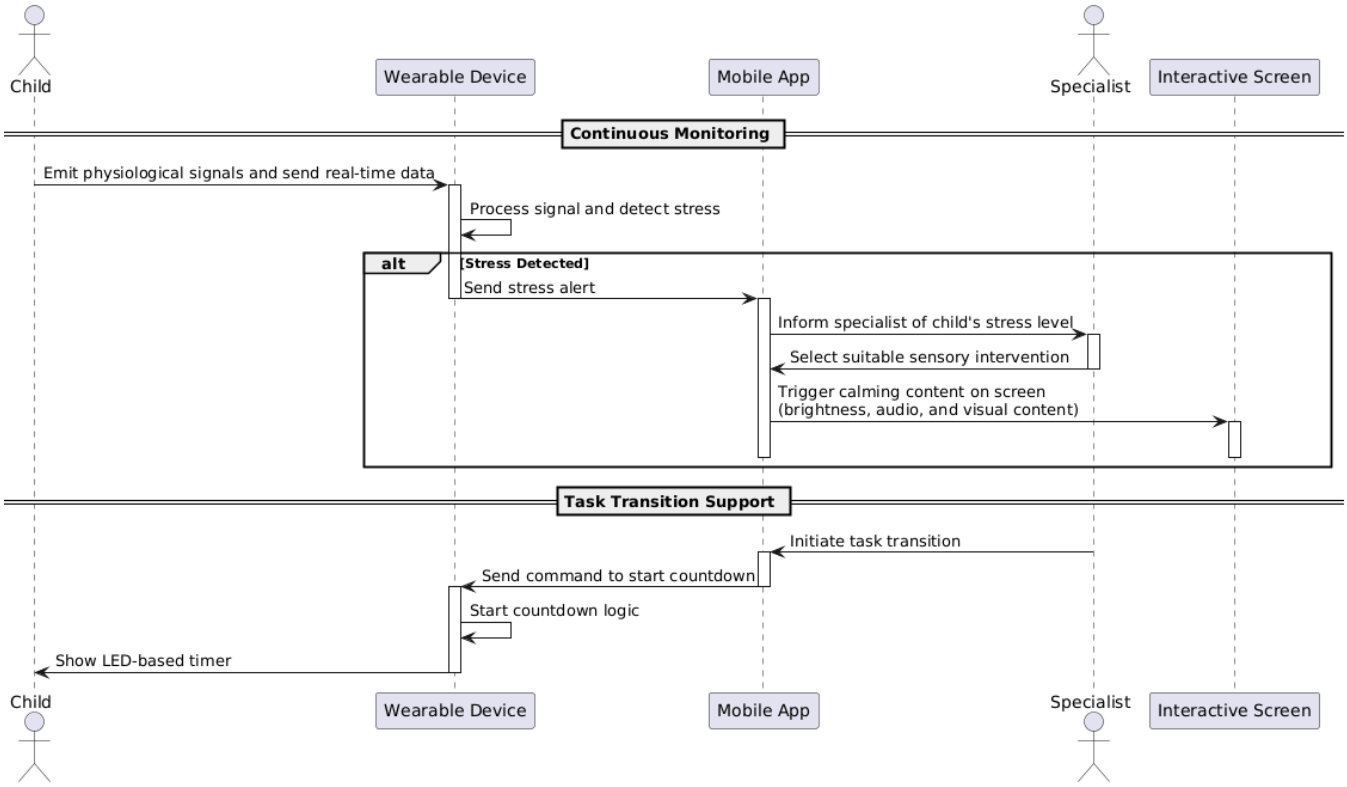

Figure 3.4: Sequence diagram

3.6 Schematic diagram

The schematic diagram shows the hardware layout of the wearable device.The ESP32 microcontroller serves as the central unit, connected to the GSR sensor,MPU6050 motion sensor and the MAX30102 heart rate sensor for collecting physiological data. It also shows the WS2812 LED ring that provides the visual feedback.

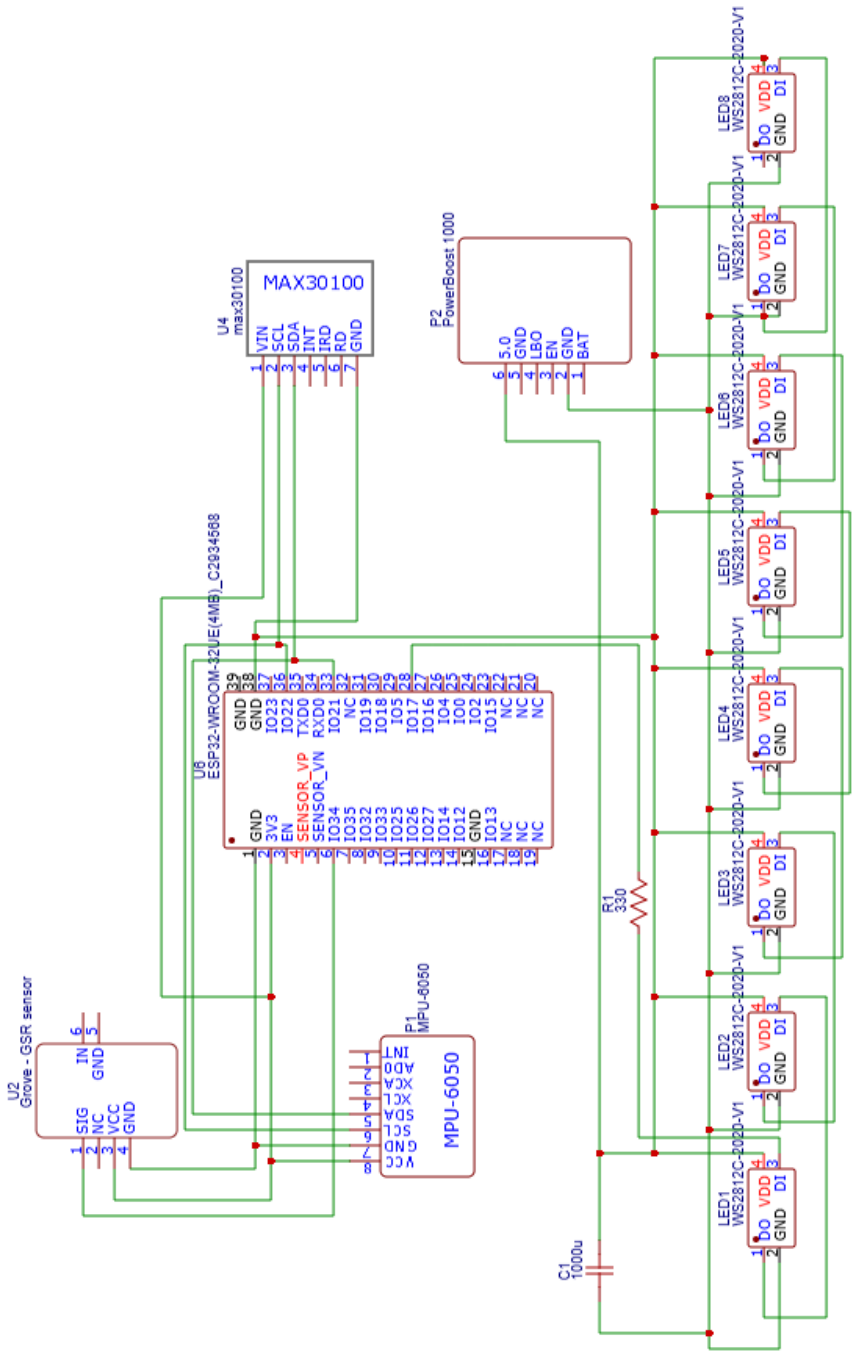

Figure 3.5: Schematic diagram of wearable device

The schematic diagram here shows the hardware layout of the interactive screen module. A Raspberry Pi 4B serves as the main processing unit, interfacing with a TFT LCD display through SPI communication for visual output. A USB speaker is connected to provide audio feedback.

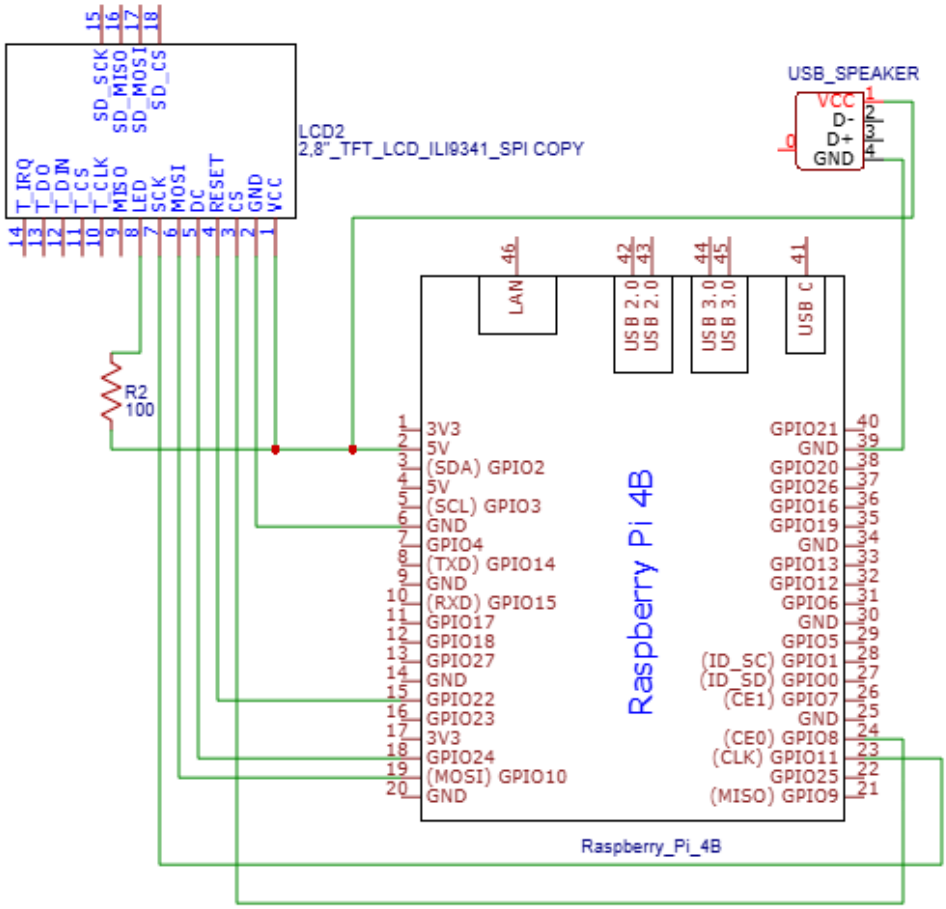

Figure 3.6: Schematic diagram of Interactive Screen

3.7 Summary

In this chapter, we have discussed the system hardware and software components with their alternatives. The conceptual description of the system and the general flow of the system with all necessary diagrams are presented, too.

Chapter 4

Conclusion

4.1 Summary

During this semester, we prepared the Introduction chapter. In Chapter One we wrote the project's background, problem statement, aims, objectives, requirements, system description, and limitations. We also completed Chapter Two, where we provide an overview of definition and classifications for Autism, and sensory processing difficulties in Autistic children and a literature review that compares our project to similar ones. Finally, in Chapter Three we outline the project's design, encompassing both hardware and software aspects, discuss design choices, the conceptual background of the software, sequence diagram and presents a schematic diagram.

4.2 Conclusion

During this semester, we have completed the analysis and design of the parts of the project as well as designed the entire architecture of the project. The step that was done is the analysis part, where we analyzed some assumptions regarding children with Autism Spectrum Disorder (ASD) in terms of difficulty to emotionally handle and change between one task to another. In addition, based on the analysis, we defined what will be the goals of the proposed system. Moreover, we have designed the entire architecture of the system as well as chosen which hardware and software components will be in the system. We have designed detailed designs of diagrams for the wearable device and the interactive screen.

For next semester, we plan to begin the implementation of the prototype of the system and test and evaluate to confirm the system's functionality and reliability.

References

[1] Special Education Guide, *The definition of autism under idea part c*, https://www.specialeducationg com/disability-profiles/autism/, Accessed: 2025-04-19.

[2] Behavioral Innovations, *Types and levels of autism spectrum disorder*, https://behavioral-innovations.com/blog/types-and-levels-autism-spectrum-disorder/, Accessed: 2025-04-19.

[3] A. O'Brien, R. Schlosser, C. Yu, and A. A. Allen, "Repurposing a smartwatch to support individuals with autism spectrum disorder: Sensory and operational considerations," *Journal of Special Education Technology*, vol. 36, no. 4, 2020, Accessed: 2025-04-19. DOI: 10.1177/0162643420904001

[4] National Autistic Society, *Sensory differences – a guide for all audiences*, https://www.autism.org.uk/advice-and-guidance/topics/sensory-differences/sensory-differences/all-audiences, Accessed: 2025-04-19.

[5] University of Central Florida, *Preventing, anticipating, and mitigating off-task behavior in special needs students*, https://www.ece.ucf.edu/seniordesign/su2017fa2017/g20/index.html, Accessed: 2025-04-4.

[6] Empatica, *Embraceplus*, https://www.empatica.com/embraceplus, Accessed: 2025-04-4.

[7] Verizon Communications, *A new tool for kids and people with autism: The gizmo watch 3 – adventure*, https://www.verizon.com/about/parenting/gizmo-watch-3-caring-for-people-with-Autism, Accessed: 2025-04-4.

[8] Xecor, *Esp32 vs arduino*, https://www.xecor.com/blog/esp32-vs-arduino, Accessed: 2025-04-20.

[9] Maker Store Australia, *Lilypad arduino 328 main board*, https://www.makerstore.com.au/product/elec-lily-mboard/, Accessed: 2025-04-20.

[10] Cytron Technologies, *Raspberry pi zero 2 w – quad-core and 64-bit cpu*, https://www.cytron.io/tutorial/raspberry-pi-zero-2-w-quad-core-and-64-bit-cpu, Accessed: 2025-04-20.

[11] Nabto, *A complete guide to iot with esp32*, https://www.nabto.com/guide-to-iot-esp-32/, Accessed: 2025-04-20.

[12] Alibaba.com, *Jeking lilypad 328 main board atmega328p*, https://www.alibaba.com/product-detail/Jeking-LilyPad-328-Main-Board-ATmega328P_60682251395.html, Accessed: 2025-04-20.

[13] D. McIlwain and et al., "Healthcare for autistic adults: A scoping review," *Journal of Biomedical Informatics*, vol. 94, p. 103 183, 2019. DOI: 10.1016/j.jbi.2019.103183 [Online]. Available: https://www.sciencedirect.com/science/article/pii/S1532046419300577

[14] C. Lord, M. Elsabbagh, G. Baird, and J. Veenstra-Vanderweele, "Autism spectrum disorder," *The Lancet*, vol. 387, no. 10022, pp. 508–520, 2016. DOI: 10.1016/S0140-6736(15)01189-1 [Online]. Available: https://pmc.ncbi.nlm.nih.gov/articles/PMC5058562/

[15] Seeed Studio, *Grove - gsr sensor wiki*, https://wiki.seeedstudio.com/Grove-GSR_Sensor/, Accessed: 2025-04-20.

[16] iMotions, *Shimmer3 gsr+*, https://imotions.com/products/hardware/shimmer3-gsr/, Accessed: 2025-04-20.

[17] iElectrony, *Max30102 heart rate and pulse oximeter sensor module*, https://ielectrony.com/en/product/max30102-heart-rate-and-pulse-oximeter-sensor-module/, Accessed: 2025-04-20.

[18] KitsGuru, *Heart beat pulse sensor*, https://kitsguru.com/products/heart-beat-pulse-sensor, Accessed: 2025-04-20.

[19] ElectronicWings, *Mpu6050 gyroscope, accelerometer, and temperature sensor module*, https://www.electronicwings.com/sensors-modules/mpu6050-gyroscope-accelerometer-temperature-sensor-module, Accessed: 2025-04-21.

[20] ElectronicWings, *Adxl335 accelerometer module*, https://www.electronicwings.com/sensors-modules/adxl335-accelerometer-module, Accessed: 2025-04-21.

[21] SuntechLite, *Apa102 vs ws2812b: Differences and comparison*, https://suntechlite.com/apa102-vs-ws2812b/, Accessed: 2025-04-21.

[22] NVIDIA Corporation, *Jetson nano developer kit*, https://developer.nvidia.com/embedded/jetson-nano, Accessed: 2025-04-21.

[23] Amazon.com, *Raspberry pi 4 model b 2019 quad core 64 bit bluetooth*, https://www.amazon.com/Raspberry-Model-2019-Quad-Bluetooth/dp/B07TC2BK1X, Accessed: 2025-04-21.

[24] Seeed Studio, *Nvidia jetson nano developer kit*, https://www.seeedstudio.com/NVIDIAr-Jetson-Nanotm-Developer-Kit-p-2916.html, Accessed: 2025-04-21.

[25] Alibaba.com, *Blue backlight lcd module display 2004*, https://www.alibaba.com/product-detail/Blue-Blacklight-LCD-Module-Display-2004_60676471537.html, Accessed: 2025-04-21.

[26] Alibaba.com, *1.44", 1.8", 2.0" lcd display modules*, https://italian.alibaba.com/product-detail/1-44-1-8-2-0-60551443058.html, Accessed: 2025-04-21.

[27] Robotistan, *Odseven mini external usb stereo speaker for raspberry pi*, https://www.robotistan.com/odseven-mini-external-usb-stereo-speaker-for-raspberry-pi, Accessed: 2025-04-22.

[28] KitsGuru, *Mh-m28 wireless bluetooth audio receiver board module blt 4.2 mp3 lossless decode*, https://www.flipkart.com/kitsguru-mh-m28-wireless-bluetooth-audio-receiver-board-module-blt-4-2-mp3-lossless-decode-electronic-components-hobby-kit/p/itm9903fa3b8d84a, Accessed: 2025-04-22.

[29] scikit-learn developers, *Support vector machines — scikit-learn documentation*, https://scikit-learn.org/stable/modules/svm.html, Accessed: 2025-05-17.

[30] Y. Zhao and et al., "Wearable sensors for autism spectrum disorder detection: A review," *Sensors*, vol. 21, no. 23, p. 7916, 2021. DOI: 10.3390/s21237916 [Online]. Available: https://www.mdpi.com/1424-8220/21/23/7916

[31] Y. Liu and et al., "Wearable sensors for autism spectrum disorder monitoring," *Sensors*, vol. 23, no. 3274, 2023. DOI: 10.3390/s23093274 [Online]. Available: https://pmc.ncbi.nlm.nih.gov/articles/PMC10055922/#sec4-sensors-23-03274

[32] Serokell, *Random forest classification: An introduction*, https://serokell.io/blog/random-forest-classification, Accessed: 2025-05-17.

[33] GeeksforGeeks, *When to use random forest over svm and vice versa*, https://www.geeksforgeeks.org/when-to-use-random-forest-over-svm-and-vice-versa/, Accessed: 2025-05-17.

[34] NovelBits, *Ble power consumption optimization*, https://novelbits.io/ble-power-consumption-optimization/, Accessed: 2025-05-20.

[35] TechTarget, *Wi-fi definition*, https://www.techtarget.com/searchmobilecomputing/definition/Wi-Fi, Accessed: 2025-05-20.

[36] HiveMQ, *Mqtt protocol overview*, https://www.hivemq.com/mqtt/, Accessed: 2025-05-20.

Appendix

نموذج إقرار وتوثيق استخدام أدوات الذكاء الاصطناعي في مشروع التخرج

أسماء الطلبة : رغد درابيع , بتول شاهين	**عنوان المشروع :** AutiSense : Smart Assistant system for children with autism
الأرقام الجامعية : 237008 , 237010	**اسم المشرف الأكاديمي :** م. وائل التكروري
الكلية / الدائرة : كلية تكنولوجيا المعلومات و هندسة الحاسوب / دائرة هندسة الحاسوب	**السنة/الفصل الدراسي :** 2025/2024 / الفصل الثاني

الغرض من الاستخدام	اسم الأداة	أماكن الاستخدام في التقرير (فصول / صفحات)	الأمر الأساسي المستخدم (Prompt)	هل تم تعديل الناتج؟	نسبة الاستخدام التقديرية	ملاحظات
توليد نصوص	ChatGPT	الفصل 1 ،صفحة 9	Review and improve writing of these project aims and objectives.	نعم	3%	تمت مراجعة النص وصياغته دون تغيير المحتوى.
		الفصل 1 , صفحة 9-10	Enhance clarity and readability of the following requirements while keeping all original ideas intact	نعم	2%	
		الفصل 1 , صفحة 11	Review and enhance readability of these project constraints, keeping all content unchanged	نعم	2%	

تدقيق لغوي	Grammarly	كامل التقرير	—	نعم	10%	تدقيق لغوي كامل مع تعديلات طفيفة.
	ChatGPT	الفصل 1, صفحة 8	Improve writing and wording the following problem statement	نعم	2%	تمت المراجعة للتأكد من بقاء الأفكار الأصلية
تلخيص محتوى	ChatGPT	الفصل 2 , 2.2.1: Definition and Classifications, صفحة 13 .	Summarize the definition and classifications of Autism Spectrum Disorder (ASD) based on IDEA and DSM-5	نعم	4%	
		الفصل 3.3.1, Stress Detection ,صفحة 29 .	Enhance clarity and readability of technical explanations for Random Forest, SVM, and stress detection logic without changing content	نعم	5%	تم تبسيط وشرح المفاهيم التقنية لتسهيل الفهم والقراءة مع الحفاظ على التفاصيل الأصلية.
		الفصل 3.3.2 , Communication Protocols. صفحة 30.	Summarize and clarify communication protocols used (Wi-Fi, BLE, MQTT) for system integration without changing content	نعم	3%	تم تلخيص وتوضيح البروتوكولات مع تبسيط الشرح لتسهيل الفهم والقراءة.

تحليل بيانات	—	—	—	—	—	—
رسم مخططات / أشكال	Plantuml	الفصل الثالث, صفحة 34	Code for Sequence Diagram	نعم	14%	الاستخدام اقتصر على توليد الـSequence Diagram
كتابة أكواد برمجية	ChatGPT	الفصل 3, صفحة 33	Assist in formatting and clarifying pseudo code for stress detection and interactive screen control .	نعم	10%	قمنا بكتابة الأكواد مبدئياً , AI ساعد فقط في ترتيب الصياغة وتوضيحها.
توثيق مراجع	—	—	—	—	—	—

ملاحظات عامة:

- يجب ألا تتجاوز النسبة الإجمالية للمحتوى غير المعدل 20% لكل مكون من مكونات المشروع ما لم تحدد كلية الطالب أو المشرف نسبة مختلفة.
- يُشترط أن يقوم الطالب بالتأكد من صحة أي جزء تم توليده أو دعمه بالذكاء الاصطناعي و أن يكون الطالب قادرا على شرحه والاجابة على أي أسئلة حوله.

إقرار فريق مشروع التخرج:

نقر بأن استخدام أدوات الذكاء الاصطناعي تم بشكل مسؤول وبما يتوافق مع السياسات الجامعية، وقد راجعنا وحررنا كافة المخرجات بما يعكس فهمنا الشخصي.

توقيع الطالب / الطلبة: رغد درابيع , بتول شاهين **التاريخ**: 2025-8-16