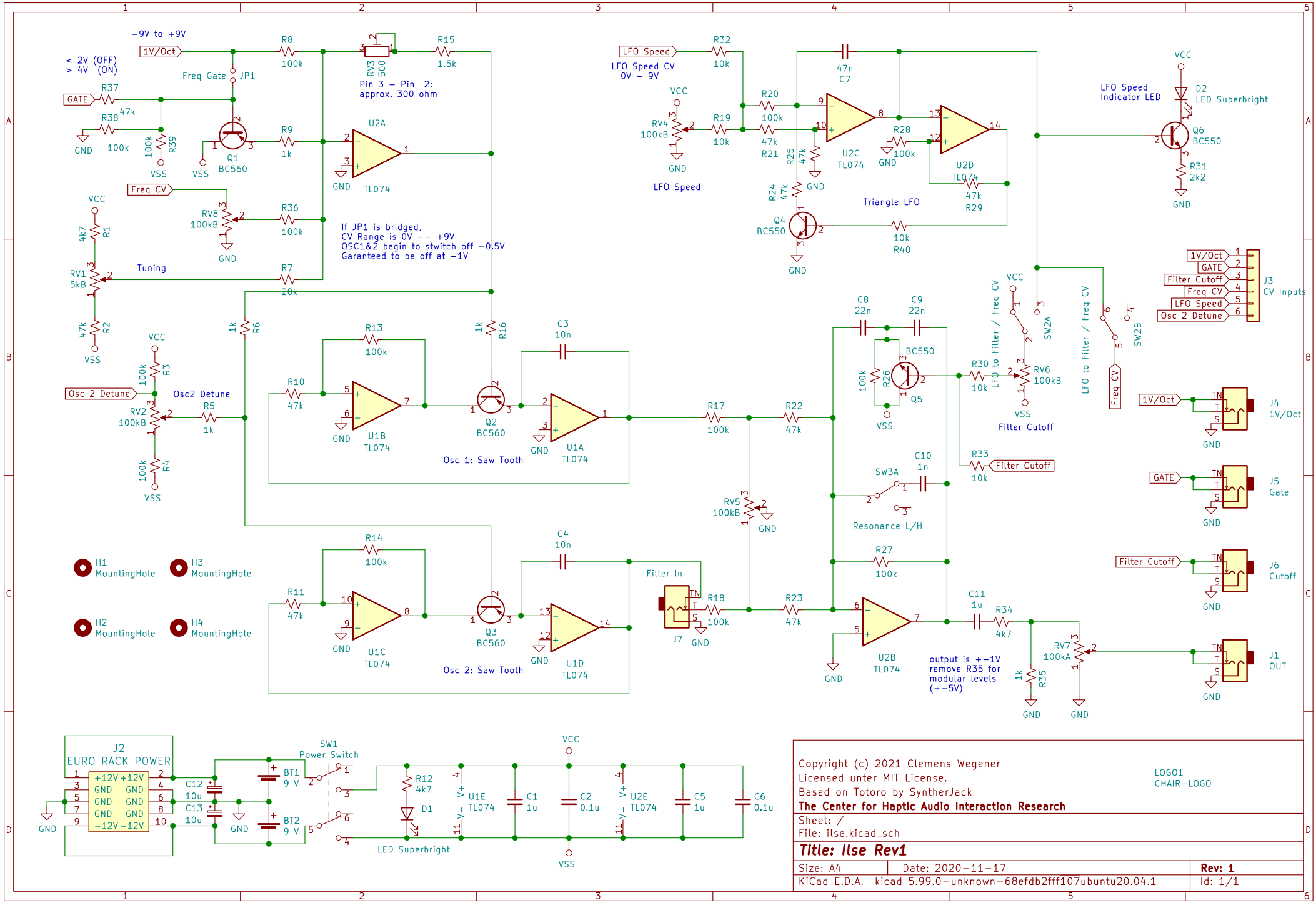

Copyright (c) 2021 Clemens Wegener
Licensed unter MIT License.
Based on Totoro by SyntherJack

LOGO1
CHAIR-LOGO

The Center for Haptic Audio Interaction Research

Sheet: /
File: ilse.kicad_sch

Title: Ilse Rev1

Size: A4	Date: 2020-11-17	Rev: 1
KiCad E.D.A. kicad 5.99.0-unknown-68efdb2fff107ubuntu20.04.1		Id: 1/1