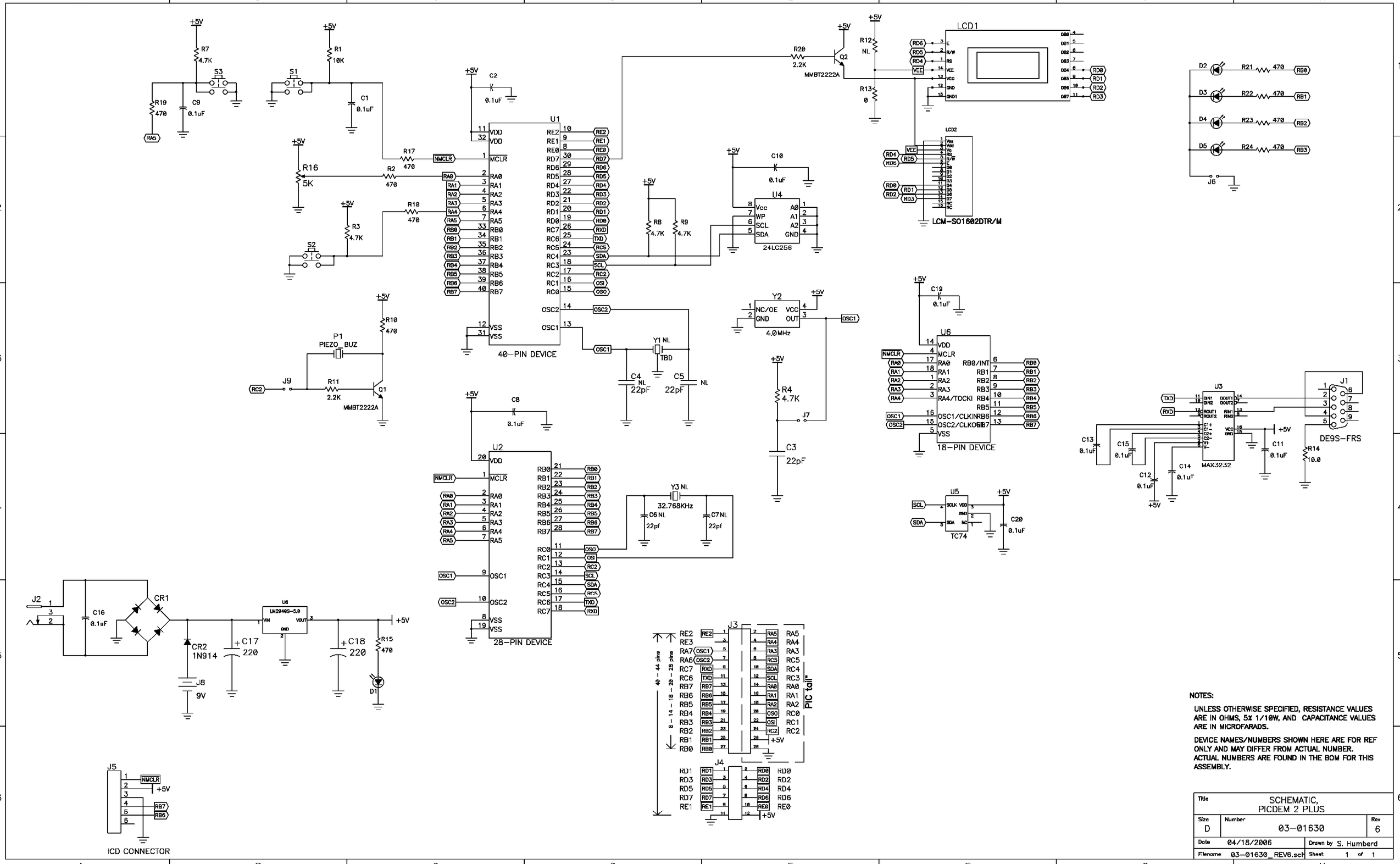

NOTES:

UNLESS OTHERWISE SPECIFIED, RESISTANCE VALUES ARE IN OHMS, 5% 1/10W, AND CAPACITANCE VALUES ARE IN MICROFARADS.

DEVICE NAMES/NUMBERS SHOWN HERE ARE FOR REF ONLY AND MAY DIFFER FROM ACTUAL NUMBER. ACTUAL NUMBERS ARE FOUND IN THE BOM FOR THIS ASSEMBLY.

Title	SCHEMATIC, PICDEM 2 PLUS	
Size D	Number 03-01630	Rev 6
Date 04/18/2006	Drawn by S. Humberd	
Filename 03-01630_REV6.sch	Sheet 1 of 1	