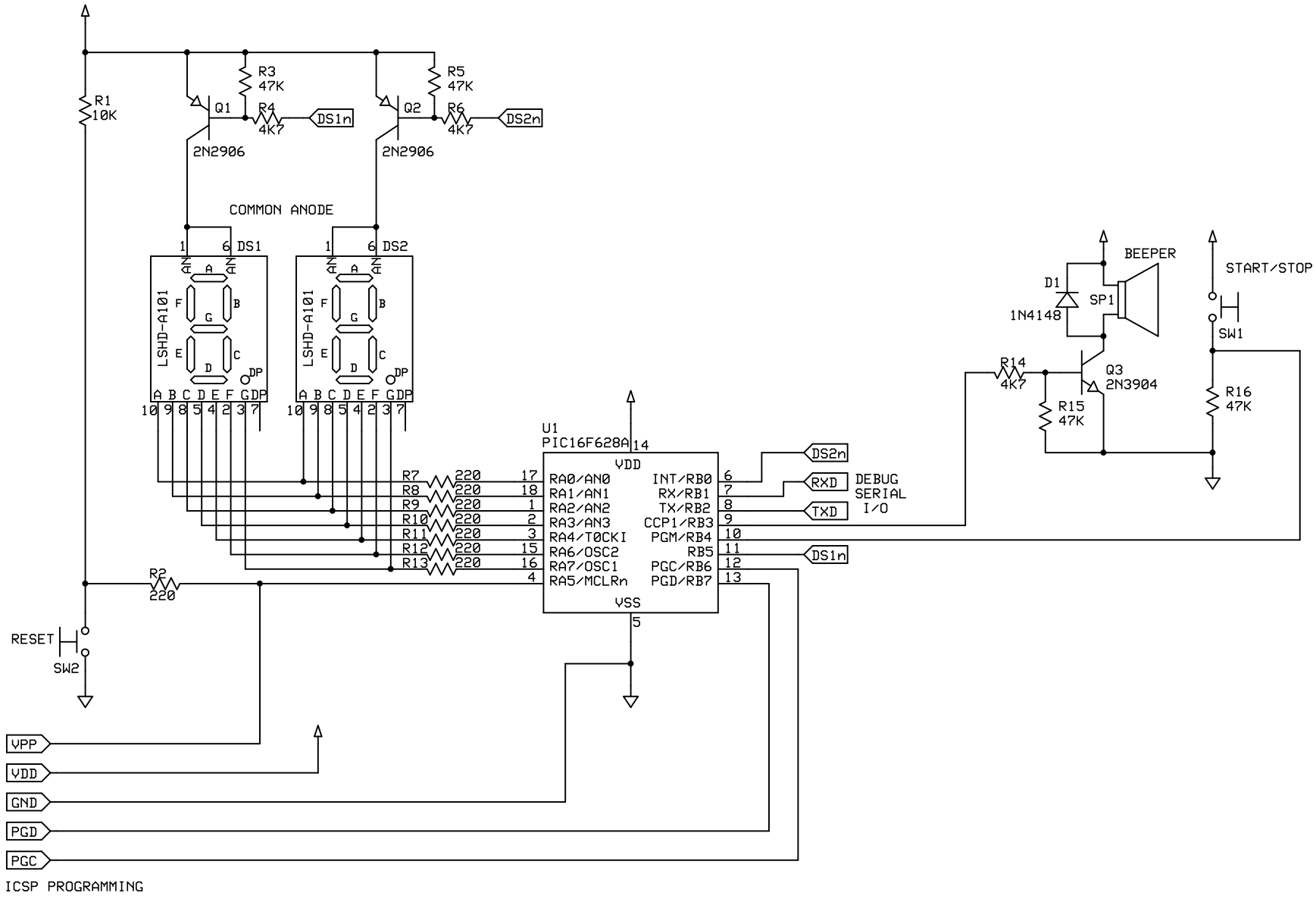

Evade-O-Tax		
16F628A Timer		
DAN1138	Rev 1.0 2/2/2017	Page 1