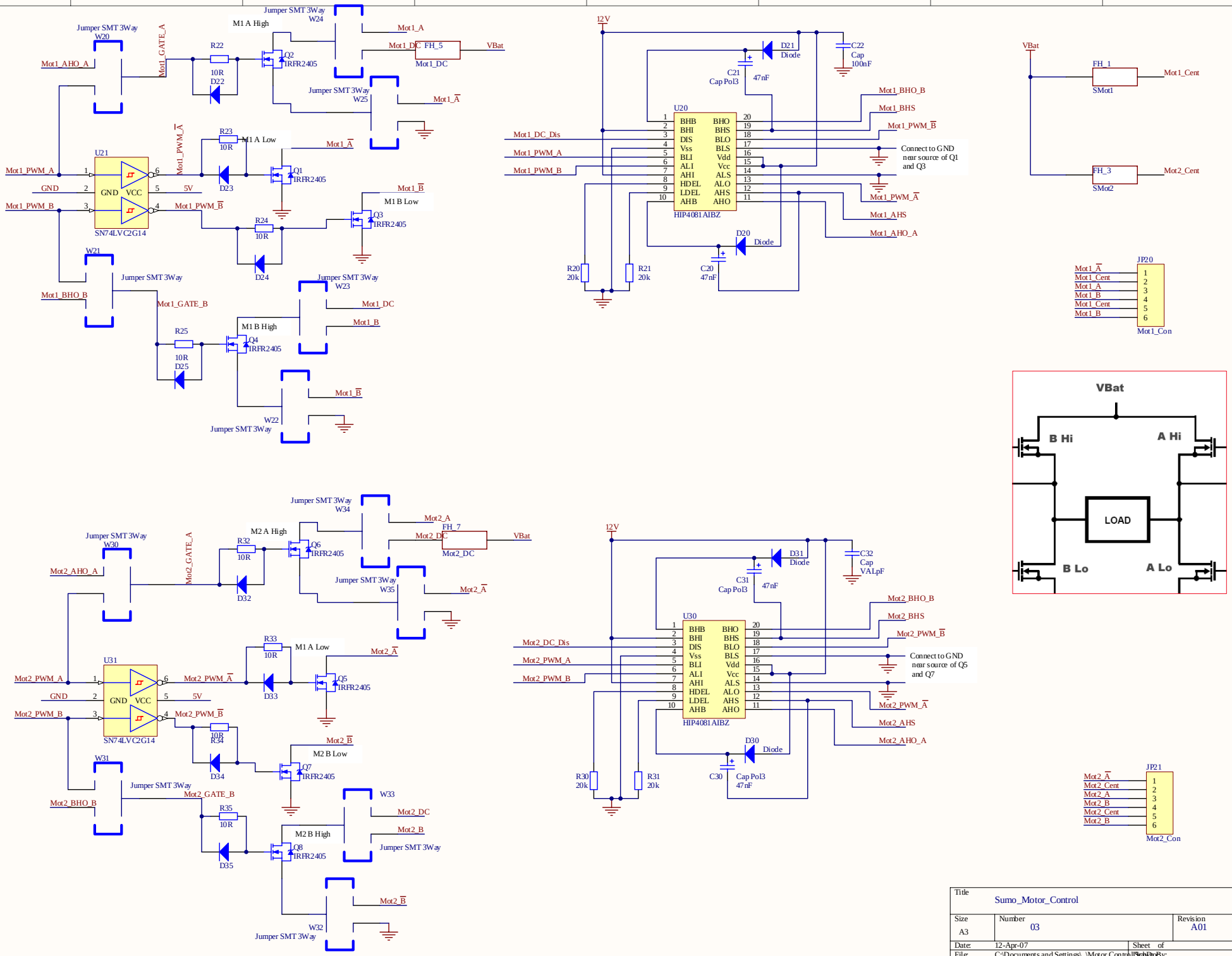

Title	Sumo_Motor_Control	
Size A3	Number 03	Revision A01
Date: 12-Apr-07	Sheet of	
File: C:\Documents and Settings\...\Motor Control.SchDoc	Drawn By:	