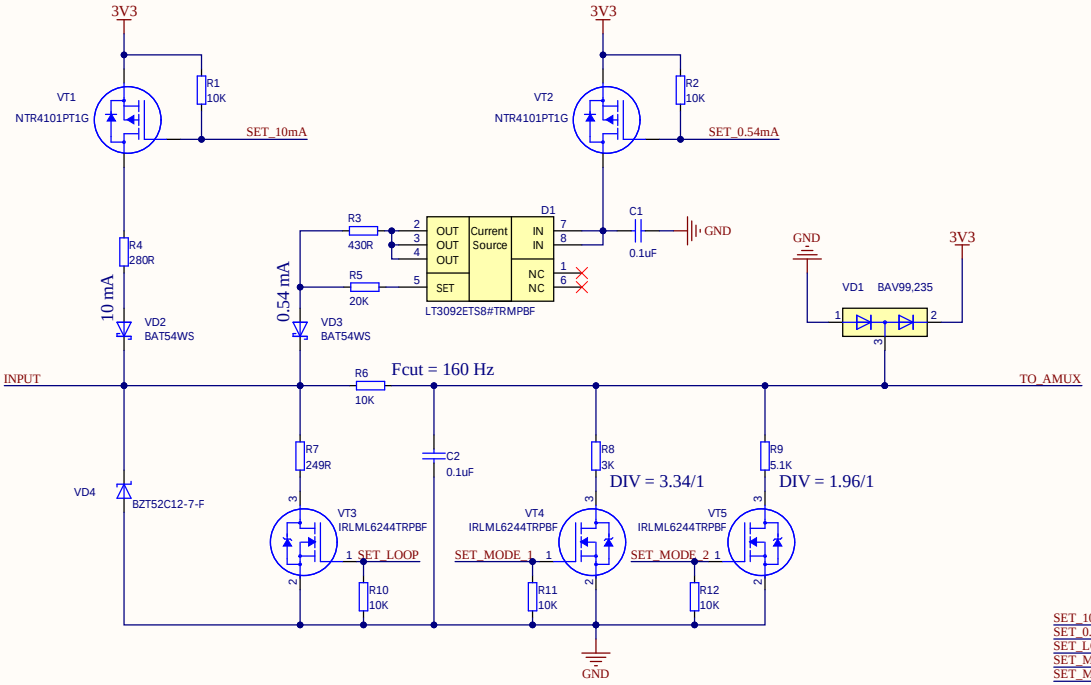

MODE CONFIGURATIONS

	SET_10mA	SET_0.54mA	SET_LOOP	SET_MODE_1	SET_MODE_2
0...1 V	HIGH	HIGH	LOW	LOW	LOW
0...5 V	HIGH	HIGH	LOW	LOW	HIGH
0...10 V	HIGH	HIGH	LOW	HIGH	LOW
0...24 mA	HIGH	HIGH	HIGH	LOW	HIGH
10 mA CONST	LOW	HIGH	LOW	LOW	LOW
NTC, PT1000	HIGH	LOW	LOW	HIGH*	HIGH*

HIGH* - depend on NTC resistance

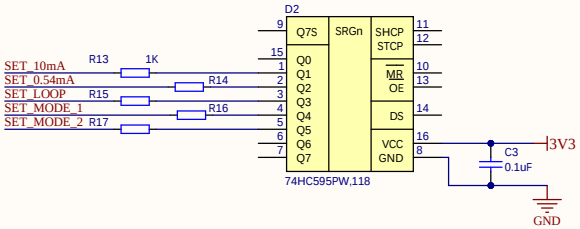

Title		
Size A3	Number	Revision
Date: 4.27.2022		Sheet of
File: Z:\WORK\..\Universal Input.SchDoc		Drawn By: