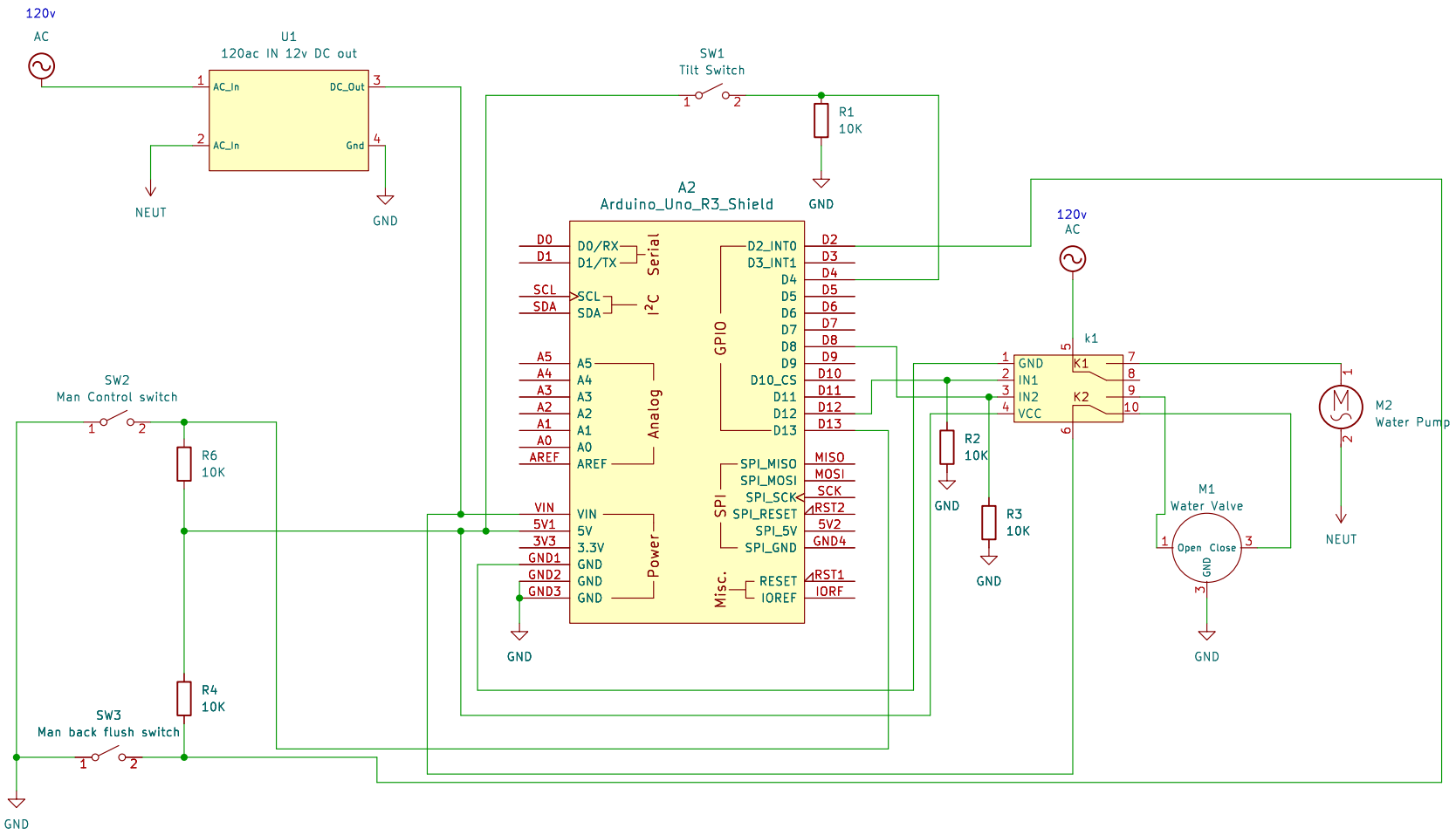

Sheet: /
File: Water Level.kicad_sch

Title: Water Back Flush Control

Size: A4	Date:	**Rev: 1**
KiCad E.D.A. kicad 7.0.5		Id: 1/1