EDES 301 — Project #1 Proposal

STIK-eNote

A Pocketable E-Paper Task Tracking Device

Render generated by Nano Banana Pro

Beckett Lyons Mazeau
Rice University • Spring 2026

February 22, 2026

Background Information

What Is STIK-eNote?

STIK-eNote is a pocketable, clamshell-style task tracking device built around the PocketBeagle. When the device is closed, all peripherals except a low-power e-Paper display are shut off, showing a persistent task summary at near-zero power draw. Opening the device triggers a reed switch (PMC-1401S1520), powering on a TFT color display and a mini keyboard for full task editing and management.

The system uses intelligent power gating via P-channel MOSFET switches (BSS84) and a 3.3V-to-5V boost converter (TPS613222ADBVR) to selectively power peripherals based on the open/closed state. A 3.3V-to-5V logic level shifter enables I2C communication between the PocketBeagle and the 5V keyboard.

The Story: A tool to manage daily tasks without the distractions of a phone or laptop — always in your pocket, always showing your priorities at a glance.

Key Features

Dual Display
ePaper for always-on task view; TFT for active editing

Smart Power Gating
Reed switch detects open/close state to toggle peripherals

Compact Keyboard
Unit CardKB v1.1 for full text input

Open Source
Designed for sharing with the embedded community

System + Power Block Diagram

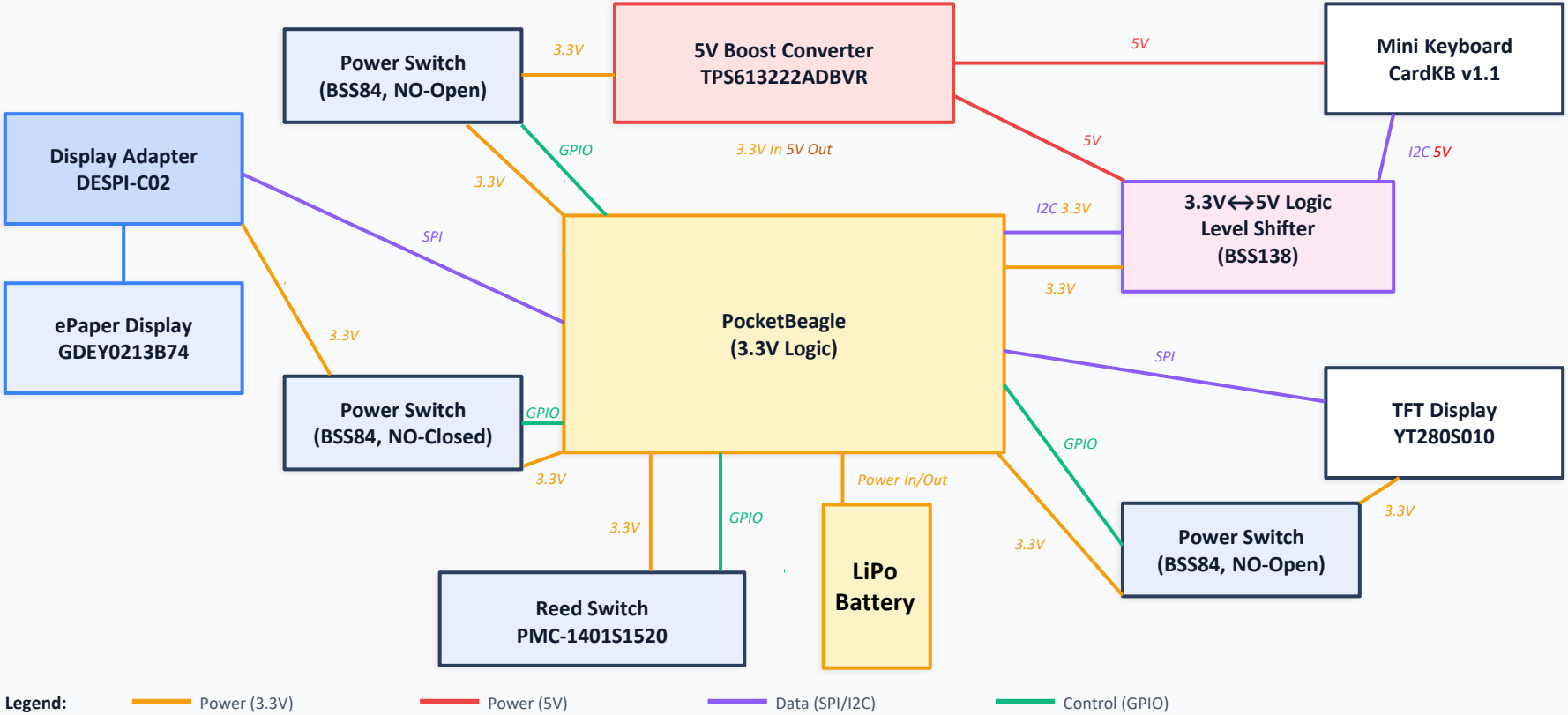

Legend: Power (3.3V) · Power (5V) · Data (SPI/I2C) · Control (GPIO)

Circuit Schematic — STIK-eNote V0.1

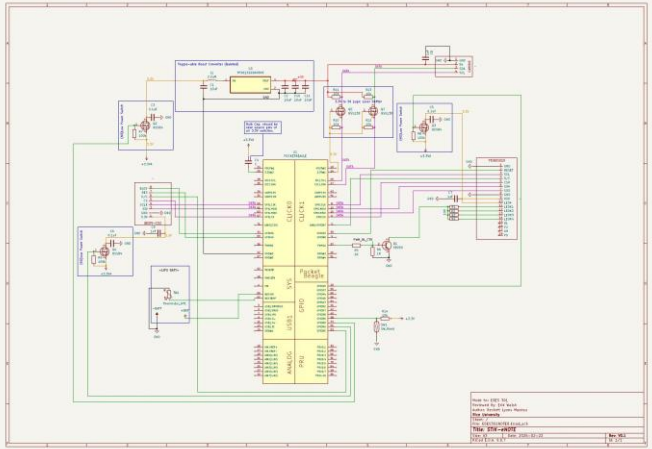

Schematic Wire Color Key

- Red — 5V Power Rail
- Black — Ground (GND)
- Orange — 3.3V Power Rail (from BeagleBoard)
- Green — Miscellaneous (control signals)
- Purple — Data Lines (SPI, I2C)

Key Circuit Subsystems

- Toggle-able 5V Boost Converter (TPS613222ADBVR)
- 3.3V → 5V Logic Level Shifter (BSS138 MOSFETs)
- P-Channel MOSFET Power Switches (BSS84)
- Reed Switch State Detection (PMC-1401S1520)
- ePaper Display Interface (SPI via DESPI-C02)
- TFT Display Interface (SPI, YT280S010)

Subsystem Detail — 5V Boost Converter

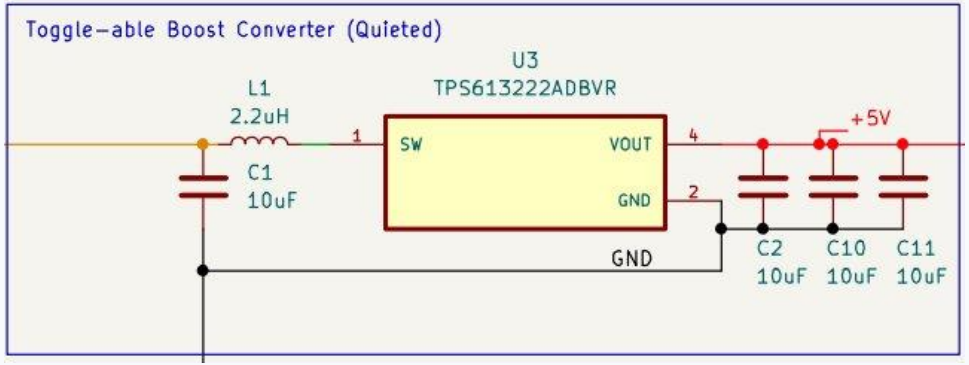

How It Works

The TPS613222ADBVR is a synchronous boost converter that steps up the PocketBeagle's 3.3V rail to a clean 5V output for the mini keyboard.

A 2.2µH inductor (VLS252012ET-2R2M) stores energy during the switching cycle. The input is stabilized by a 10µF capacitor (C1), while three 10µF output capacitors (C2, C10, C11) smooth the 5V output and reduce ripple.

The converter is labeled "Quieted" because of the generous output capacitance, which minimizes voltage ripple on the 5V rail.

Components

Ref.	Part Number	Value	Function
U3	TPS613222ADBVR	—	Boost Converter IC
L1	VLS252012ET-2R2M	2.2µH	Energy storage inductor
C1	CL10A106KP8NNNC	10µF	Input decoupling capacitor
C2,C10,C11	CL10A106KP8NNNC	10µF	Output smoothing capacitors

Subsystem Detail — P-FET Power Switches

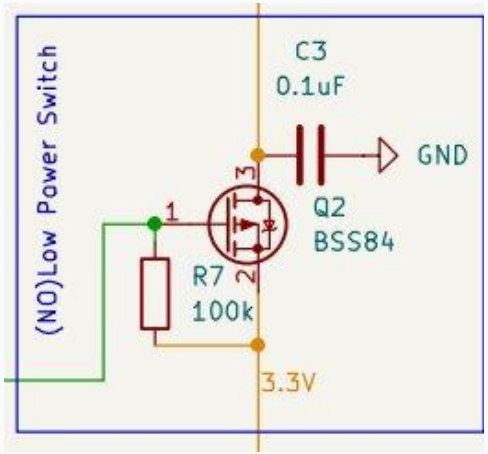

How It Works

Each switchable power rail uses a BSS84 P-channel MOSFET as a high-side switch. The gate is controlled by a GPIO pin from the PocketBeagle. When the GPIO is driven LOW, Vgs becomes negative enough to turn the P-FET on, allowing current to flow from the 3.3V source to the peripheral. When GPIO goes HIGH, the MOSFET turns off, cutting power.

A 100kΩ pull-up resistor (R7) ensures the gate defaults to HIGH (OFF) when the GPIO is not actively driven, preventing phantom power-on during boot. The 0.1µF capacitor (C3) across gate-source provides transient filtering and slows the turn-on edge, reducing inrush current.

Three instances of this switch circuit are used: one for the 5V boost converter, one for the TFT display, and one for the ePaper display adapter (inverted logic — ON when closed).

Components (per switch)

Ref.	Part Number	Value	Function
Q2	BSS84	—	P-CH MOSFET high-side switch
R7	RC0603FR-07100KL	100kΩ	Gate pull-up (default OFF)
C3	CC0603KRX7R9BB104	0.1µF	Gate-source filtering / inrush limiting

Subsystem — 3.3V to 5V Logic Level Shifter

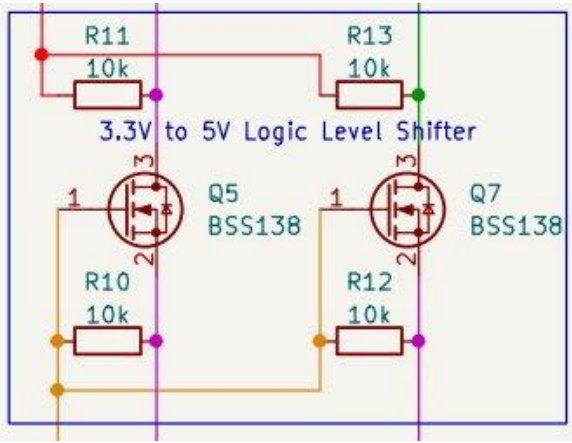

How It Works

The PocketBeagle operates at 3.3V logic while the CardKB keyboard requires 5V I2C levels. This bidirectional level shifter uses two BSS138 N-channel MOSFETs — one per I2C line (SDA and SCL).

Each channel has a 10kΩ pull-up resistor on both the low-voltage (3.3V) and high-voltage (5V) sides. When the low side drives LOW, the MOSFET turns on and pulls the high side LOW. When the high side drives LOW, the body diode pulls the source low, turning on the MOSFET and pulling the low side LOW. When neither side drives, pull-ups hold both sides HIGH at their respective voltage levels.

This classic MOSFET-based design provides reliable, bidirectional voltage translation for I2C with minimal propagation delay.

Components

Ref.	Part Number	Value	Function
Q5, Q7	BSS138	—	N-CH MOSFET level shift transistors
R10, R12	RC0603FR-0710KL	10kΩ	Low-side (3.3V) I2C pull-ups
R11, R13	RC0603FR-0710KL	10kΩ	High-side (5V) I2C pull-ups

Components & Budget

Component	Part Number	Qty	Unit $	Ext. $	Available?
Boost Converter IC	TPS613222ADBVR	1	$0.49	$0.49	Yes
NPN Transistor	SS8050-G	1	$0.24	$0.24	Yes
N-CH MOSFET (Level Shift)	BSS138	2	$0.28	$0.56	Yes
P-CH MOSFET (Power Switch)	BSS84	10	$0.03	$0.31	Yes
Inductor 2.2µH	VLS252012ET-2R2M	1	$0.25	$0.25	Yes
Cap 47µF 0805	CL21A476MQYNNNG	1	$0.29	$0.29	Yes
Cap 0.1µF 0603	CC0603KRX7R9BB104	10	$0.02	$0.24	Yes
Cap 1µF 0603	C1608X7R1C105K080AC	10	$0.06	$0.62	Yes
Res 100kΩ 0603	RC0603FR-07100KL	10	$0.01	$0.06	Yes
Res 1kΩ 0603	RC0603FR-071KL	10	$0.01	$0.08	Yes
Res 10kΩ 0603	RC0603FR-0710KL	10	$0.01	$0.10	Yes
Cap 10µF 0603	CL10A106KP8NNNC	5	$0.18	$0.90	Yes
Reed Switch SPST-NO	PMC-1401S1520	1	$0.72	$0.72	Yes

DigiKey Order Total: $4.86 | All components sourced from DigiKey. Shipping adds $4.99 to Order Total.