# 2.13 inch
# E-paper Display Series

GooDisplay®

## GDEQ0213B74

Dalian Good Display Co., Ltd.

# Product Specifications

| | |
|---|---|
| **Customer** | **Standard** |
| **Description** | **2.13” E-PAPER DISPLAY** |
| **Model Name** | **GDEQ0213B74** |
| **Date** | **2021/05/24** |
| **Revision** | **1.0** |

| | Design Engineering | | |
|---|---|---|---|
| | **Approval** | **Check** | **Design** |
| | 刘宝玉印 | 温馨之印 | 刘昭之印 |

Zhongnan Building, No.18, Zhonghua West ST,Ganjingzi DST,Dalian,CHINA
Tel: +86-411-84619565
Email: info@good-display.com
Website: www.good-display.com

GOOD DISPLAY

# Revision History

| Version | Content | Date | Producer |
|---|---|---|---|
| 1.0 | New release | 2021/05/24 | |
| | | | |
| | | | |
| | | | |
| | | | |
| | | | |
| | | | |

GOOD DISPLAY

# CONTENTS

1. Over View..... 6
2. Features ..... 6
3. Mechanical Specification..... 6
4. Mechanical Drawing of EPD Module..... 7
5. Input/output Pin Assignment..... 8
6. Electrical Characteristics..... 9
   6.1 Absolute Maximum Rating..... 9
   6.2 Panel DC Characteristics..... 10
   6.3 Panel DC Characteristics(Driver IC Internal Regulators)..... 11
   6.4 Panel AC Characteristics..... 11
      6.4.1 MCU Interface Selection..... 11
      6.4.2 MCU Serial Interface (4-wire SPI)..... 11
      6.4.3 MCU Serial Interface (3-wire SPI)..... 13
      6.4.4 Interface Timing..... 14
7. Command Table..... 16
8. Optical Specification..... 24
9. Handling, Safety, and Environment Requirements..... 24
10. Reliability Test..... 25

GOOD DISPLAY

11. Block Diagram..... 26
12. Typical Application Circuit with SPI Interface..... 27
13. Matched Development Kit..... 28
14. Typical Operating Sequence..... 29
14.1 Normal Operation Flow..... 29
14.2 Normal Operation Reference Program Code..... 30
15. Inspection condition..... 31
15.1 Environment..... 31
15.2 Illuminance..... 31
15.3 Inspect method..... 31
15.4 Display area..... 32
15.5 Inspection standard..... 32
15.5.1 Electric inspection standard..... 32
15.5.2 Appearance inspection standard..... 33
16. Packaging..... 35
17. Precautions..... 36

GOOD DISPLAY

## 1. Over View

GDEQ0213B74 is an Active Matrix Electrophoretic Display (AM EPD), with interface and a reference system design. The display is capable to display images at 1-bit white, black full display capabilities. The2.13inch active area contains 250×122 pixels. The module is a TFT-array driving electrophoresis display, with integrated circuits including gate driver, source driver, MCU interface, timing controller, oscillator, DC-DC, SRAM, LUT, VCOM. Module can be used in portable electronic devices, such as Electronic Shelf Label (ESL) System.

## 2. Features

◆250×122 pixels display
◆High contrast High reflectance
◆Ultra wide viewing angle Ultra low power consumption
◆Pure reflective mode
◆Bi-stable display
◆Commercial temperature range
◆Landscape portrait modes
◆Hard-coat antiglare display surface
◆Ultra Low current deep sleep mode
◆On chip display RAM
◆Waveform can stored in On-chip OTP or written by MCU
◆Serial peripheral interface available
◆On-chip oscillator
◆On-chip booster and regulator control for generating VCOM, Gate and Source driving voltage
◆$I^2C$ signal master interface to read external temperature sensor
◆Built-in temperature sensor
◆Support partial update mode

## 3. Mechanical Specification

| Parameter | Specifications | Unit | Remark |
|---|---|---|---|
| Screen Size | 2.13 | Inch | |
| Display Resolution | 250(H)×122(V) | Pixel | DPI:130 |
| Active Area | 23.7046×48.55 | mm | |
| Pixel Pitch | 0.1943×0.1942 | mm | |
| Pixel Configuration | Square | | |
| Outline Dimension | 29.2(H)×59.2 (V) ×0.926(D) | mm | |
| Weight | 3.2±0.5 | g | |

GOOD DISPLAY

## 4.Mechanical Drawing of EPD Module

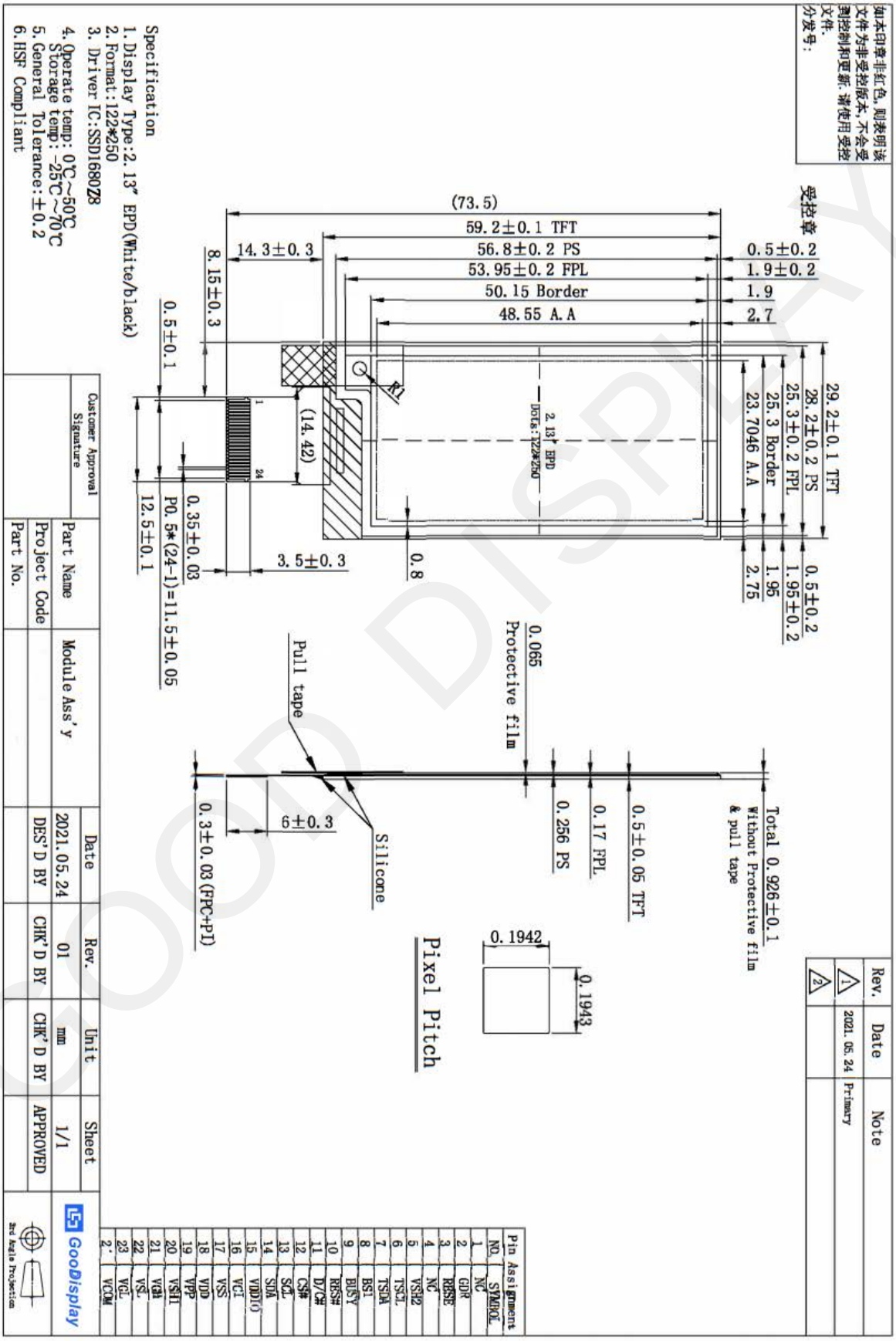

## 5. Input/output Pin Assignment

| No. | Name | I/O | Description | Remark |
|---|---|---|---|---|
| 1 | NC | | Do not connect with other NC pins | Keep Open |
| 2 | GDR | O | N-Channel MOSFET Gate Drive Control | |
| 3 | RESE | I | Current Sense Input for the Control Loop | |
| 4 | NC | NC | Do not connect with other NC pins | Keep Open |
| 5 | VSH2 | C | Positive Source driving voltage(Red) | |
| 6 | TSCL | O | I2C Interface to digital temperature sensor Clock pin | |
| 7 | TSDA | I/O | I2C Interface to digital temperature sensor Data pin | |
| 8 | BS1 | I | Bus Interface selection pin | Note 5-5 |
| 9 | BUSY | O | Busy state output pin | Note 5-4 |
| 10 | RES# | I | Reset signal input. Active Low. | Note 5-3 |
| 11 | D/C# | I | Data /Command control pin | Note 5-2 |
| 12 | CS# | I | Chip select input pin | Note 5-1 |
| 13 | SCL | I | Serial Clock pin (SPI) | |
| 14 | SDA | I/O | Serial Data pin (SPI) | |
| 15 | VDDIO | P | Power Supply for interface logic pins It should be connected with VCI | |
| 16 | VCI | P | Power Supply for the chip | |
| 17 | VSS | P | Ground | |
| 18 | VDD | C | Core logic power pin VDD can be regulated internally from VCI. A capacitor should be connected between VDD and VSS | |
| 19 | VPP | P | FOR TEST | Keep Open |
| 20 | VSH1 | C | Positive Source driving voltage | |
| 21 | VGH | C | Power Supply pin for Positive Gate driving voltage and VSH1 | |
| 22 | VSL | C | Negative Source driving voltage | |
| 23 | VGL | C | Power Supply pin for Negative Gate driving voltage VCOM and VSL | |
| 24 | VCOM | C | VCOM driving voltage | |

GOOD DISPLAY

I = Input Pin, O =Output Pin,I /O = Bi-directional Pin (Input/output), P = Power Pin, C = Capacitor Pin

**Note 5-1:** This pin (CS#) is the chip select input connecting to the MCU. The chip is enabled for MCU communication only when CS# is pulled LOW.

**Note 5-2:** This pin is (D/C#) Data/Command control pin connecting to the MCU in 4-wire SPI mode. When the pin is pulled HIGH, the data at SDA will be interpreted as data. When the pin is pulled LOW, the data at SDA will be interpreted as command.

**Note 5-3:** This pin (RES#) is reset signal input. The Reset is active low.

**Note 5-4:** This pin is Busy state output pin. When Busy is High, the operation of chip should not be interrupted, command should not be sent. The chip would put Busy pin High when -Outputting display waveform -Communicating with digital temperature sensor

**Note 5-5:** Bus interface selection pin

| BS1 State | MCU Interface |
|---|---|
| L | 4-lines serial peripheral interface(SPI) - 8 bits SPI |
| H | 3- lines serial peripheral interface(SPI) - 9 bits SPI |

## 6. Electrical Characteristics

### 6.1 Absolute Maximum Rating

| Parameter | Symbol | Rating | Unit |
|---|---|---|---|
| Logic supply voltage | VCI | -0.5 to +4.0 | V |
| Logic Input voltage | VIN | -0.5 to VCI +0.5 | V |
| Logic Output voltage | VOUT | -0.5 to VCI +0.5 | V |
| Operating Temp range | TOPR | 0 to +50 | ºC. |
| Storage Temp range | TSTG | -25 to+70 | ºC. |
| | | | |
| Optimal Storage Humidity | HSTGo | 55±10 | %RH |

**Note:** Maximum ratings are those values beyond which damages to the device may occur. Functional operation should be restricted to the limits in the Panel DC Characteristics tables.

## 6.2 Panel DC Characteristics

The following specifications apply for: VSS=0V, VCI=3.0V, TOPR =25ºC.

| Parameter | Symbol | Condition | Applicable pin | Min. | Typ. | Max. | Unit |
|---|---|---|---|---|---|---|---|
| Single ground | $V_{SS}$ | - | | - | 0 | - | V |
| Logic supply voltage | $V_{CI}$ | - | VCI | 2.2 | 3.0 | 3.7 | V |
| Core logic voltage | $V_{DD}$ | | VDD | 1.7 | 1.8 | 1.9 | V |
| High level input voltage | $V_{IH}$ | - | - | 0.8 $V_{CI}$ | - | - | V |
| Low level input voltage | $V_{IL}$ | - | - | - | - | 0.2 $V_{CI}$ | V |
| High level output voltage | $V_{OH}$ | IOH = -100uA | - | 0.9 $V_{CI}$ | - | - | V |
| Low level output voltage | $V_{OL}$ | IOL = 100uA | - | - | - | 0.1 $V_{CI}$ | V |
| Typical power | $P_{TYP}$ | $V_{CI}$ =3.0V | - | - | 9 | - | mW |
| Deep sleep mode | $P_{STPY}$ | $V_{CI}$ =3.0V | - | - | 0.003 | - | mW |
| Typical operating current | Iopr_VCI | $V_{CI}$ =3.0V | - | - | 3 | - - | mA |
| Image update time | - | 25 ºC | - | - | 3 | - | sec |
| Sleep mode current | Islp_$V_{CI}$ | DC/DC off<br>No clock<br>No input load<br>Ram data retain | - | - | 20 | | uA |
| Deep sleep mode current | Idslp_$V_{CI}$ | DC/DC off<br>No clock<br>No input load<br>Ram data not retain | - | - | 1 | 5 | uA |

**Notes:**

1. The typical power is measured with following transition from horizontal 2 scale pattern to vertical 2 scale pattern.

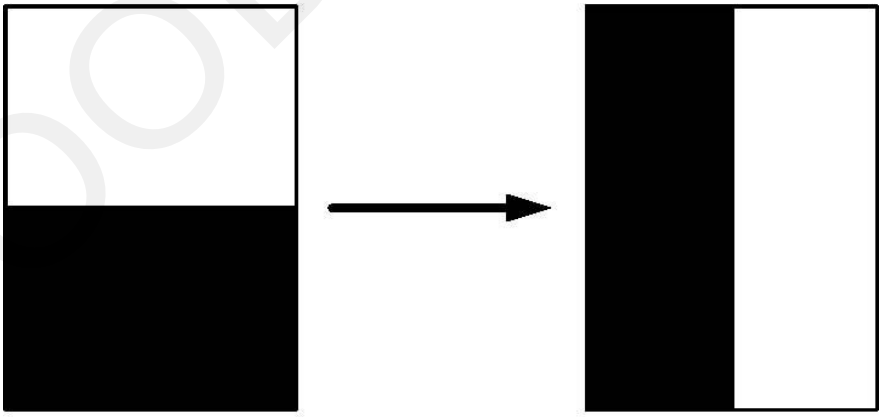

2. The deep sleep power is the consumed power when the panel controller is in deep sleep mode.
3. The listed electrical/optical characteristics are only guaranteed under the controller & waveform provided by Good Display.

## 6.3 Panel DC Characteristics(Driver IC Internal Regulators)

The following specifications apply for: VSS=0V, VCI=3.0V, TOPR =25ºC.

| Parameter | Symbol | Condition | Applicable pin | Min. | Typ. | Max. | Unit |
|---|---|---|---|---|---|---|---|
| VCOM output voltage | VCOM | - | VCOM | - | TBD | - | V |
| Positive Source output voltage | $V_{SH}$ | - | $S_0$~$S_{121}$ | +14.5 | +15 | +15.5 | V |
| Negative Source output voltage | $V_{SL}$ | - | $S_0$~$S_{121}$ | -15.5 | -15 | -14.5 | V |
| Positive gate output voltage | Vgh | - | $G_0$~$G_{249}$ | +21 | +22 | +23 | V |
| Negative gate output voltage | Vgl | - | $G_0$~$G_{249}$ | -21 | -20 | -19 | V |

## 6.4 Panel AC Characteristics

### 6.4.1 MCU Interface Selection

The pin assignment at different interface mode is summarized in Table 6-4-1. Different MCU mode can be set by hardware selection on BS1 pins. The display panel only supports 4-wire SPI or 3-wire SPI interface mode.

| Pin Name | Data/Command Interface | | Control Signal | | |
|---|---|---|---|---|---|
| Bus interface | SDA | SCL | CS# | D/C# | RES# |
| BS1=L 4-wire SPI | SDA | SCL | CS# | D/C# | RES# |
| BS1=H 3-wire SPI | SDA | SCL | CS# | L | RES# |

### 6.4.2 MCU Serial Interface (4-wire SPI)

The serial interface consists of serial clock SCL, serial data SDA, D/C#, CS#. This interface supports Write mode and Read mode.

| Function | CS# | D/C# | SCL |
|---|---|---|---|
| Write command | L | L | ↑ |
| Write data | L | H | ↑ |

**Note:** ↑ stands for rising edge of signal

In the write mode SDA is shifted into an 8-bit shift register on every rising edge of SCL in the order of D7, D6, ... D0. The level of D/C# should be kept over the whole byte . The data byte in the shift register is written to the Graphic Display Data RAM /Data Byte register or command Byte register according to D/C# pin.

GOOD DISPLAY

**Figure 6-1: Write procedure in 4-wire SPI mode**

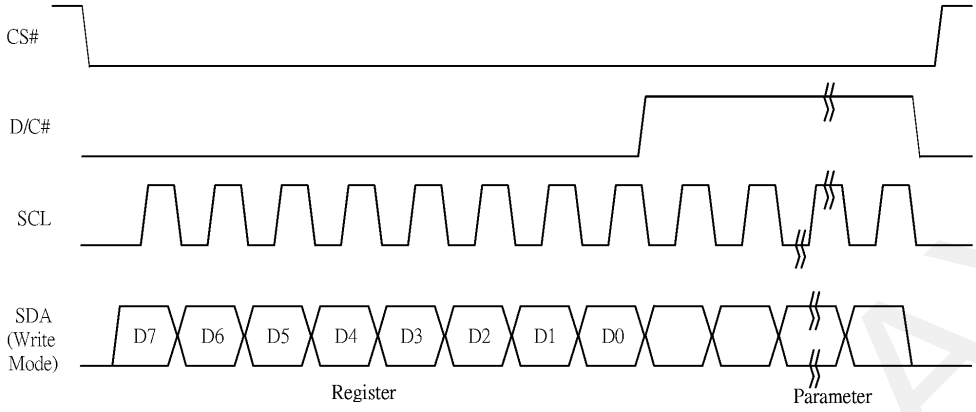


In the Read mode:

1. After driving CS# to low, MCU need to define the register to be read.

2. SDA is shifted into an 8-bit shift register on every rising edge of SCL in the order of D7, D6, ... D0 with D/C# keep low.

3. After SCL change to low for the last bit of register, D/C# need to drive to high.

4. SDA is shifted out an 8-bit data on every falling edge of SCL in the order of D7, D6, … D0.

5. Depending on register type, more than 1 byte can be read out. After all byte are read, CS# need to drive to high to stop the read operation.

**Figure 6-2: Read procedure in 4-wire SPI mode**

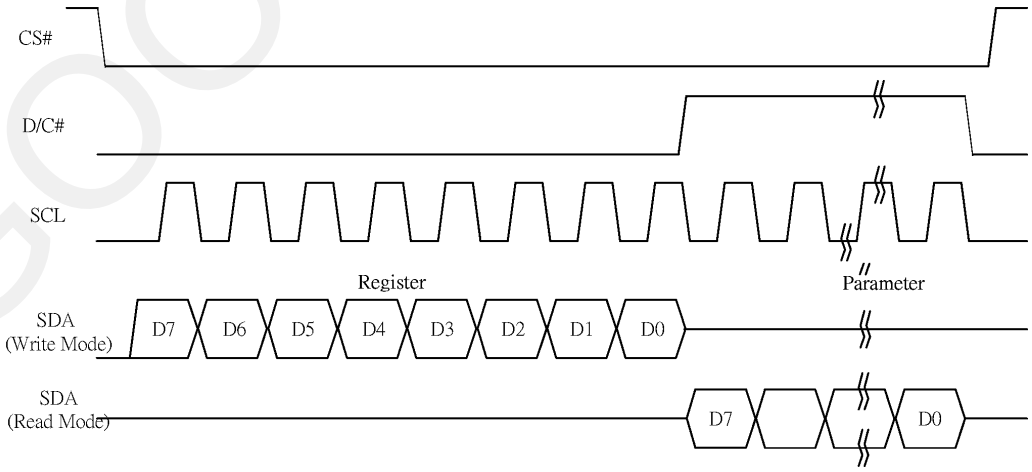

### 6.4.3 MCU Serial Interface (3-wire SPI)

The 3-wire serial interface consists of serial clock SCL, serial data SDA and CS#. This interface also supports Write mode and Read mode.

The operation is similar to 4-wire serial interface while D/C# pin is not used. There are altogether 9-bits will be shifted into the shift register on every ninth clock in sequence: D/C# bit, D7 to D0 bit. The D/C# bit (first bit of the sequential data) will determine the following data byte in the shift register is written to the Display Data RAM (D/C# bit = 1) or the command register (D/C# bit = 0).

| Function | CS# | D/C# | SCL |
|---|---|---|---|
| Write command | L | Tie | ↑ |
| Write data | L | Tie | ↑ |

**Note:** ↑ stands for rising edge of signal

**Figure 6-3: Write procedure in 3-wire SPI mode**

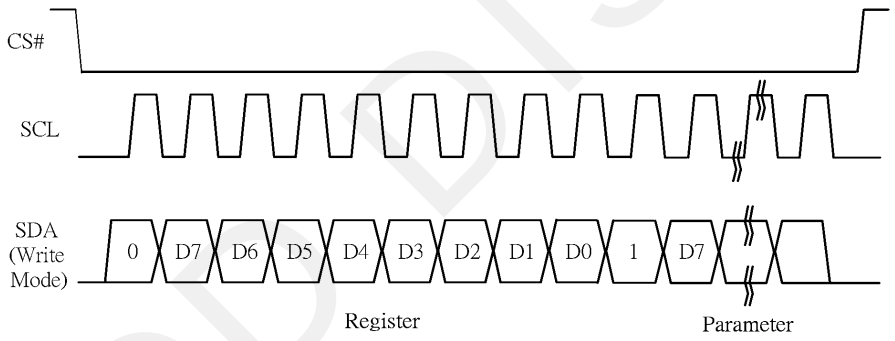


In the Read mode:

1. After driving CS# to low, MCU need to define the register to be read.
2. D/C=0 is shifted thru SDA with one rising edge of SCL
3. SDA is shifted into an 8-bit shift register on every rising edge of SCL in the order of D7, D6, ... D0.
4. D/C=1 is shifted thru SDA with one rising edge of SCL
5. SDA is shifted out an 8-bit data on every falling edge of SCL in the order of D7, D6, … D0.
6. Depending on register type, more than 1 byte can be read out. After all byte are read, CS# need to drive to high to stop the read operation.

**Figure 6-4: Read procedure in 3-wire SPI mode**

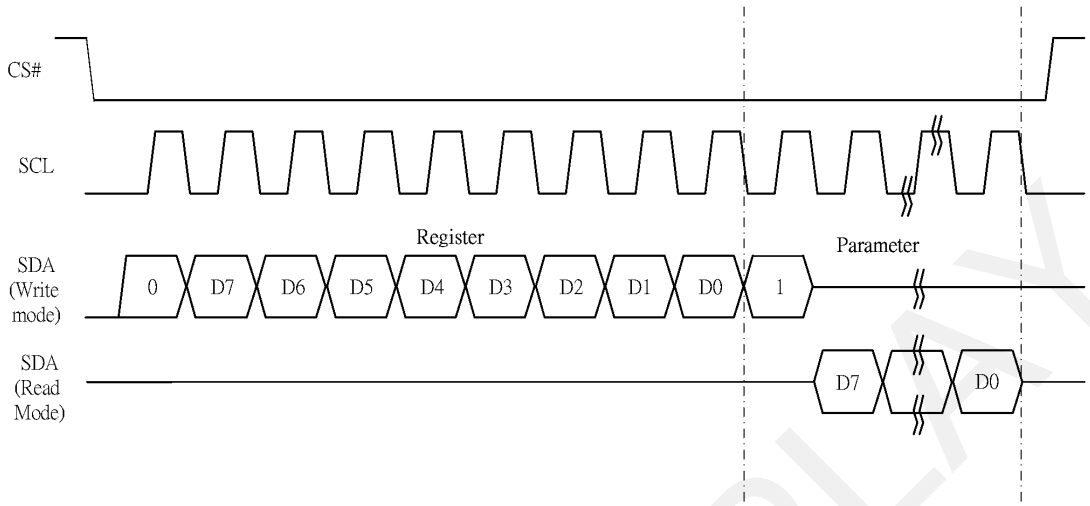


## 6.4.4 Interface Timing

The following specifications apply for: VSS=0V, VCI=3.0V, TOPR =25ºC.

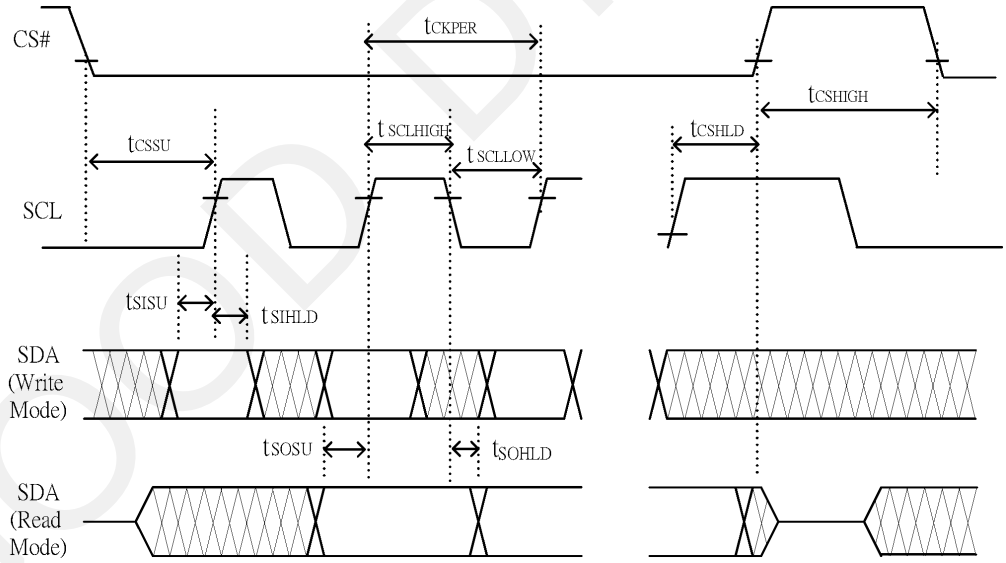


**Changed Diagram**

**Serial Interface Timing Characteristics**

(VCI - VSS = 2.2V to 3.7V, TOPR = 25°C, CL=20pF)

**Write mode**

| Symbol | Parameter | Min | Typ. | Max | Unit |
|---|---|---|---|---|---|
| fSCL | SCL frequency (Write Mode) | | | 20 | MHz |
| tCSSU | Time CS# has to be low before the first rising edge of SCLK | 60 | | | ns |
| tCSHLD | Time CS# has to remain low after the last falling edge of SCLK | 65 | | | ns |
| tCSHIGH | Time CS# has to remain high between two transfers | 100 | | | ns |
| tSCLHIGH | Part of the clock period where SCL has to remain high | 25 | | | ns |
| tSCLLOW | Part of the clock period where SCL has to remain low | 25 | | | ns |
| tSISU | Time SI (SDA Write Mode) has to be stable before the next rising edge of SCL | 10 | | | ns |
| tSIHLD | Time SI (SDA Write Mode) has to remain stable after the rising edge of SCL | 40 | | | ns |

**Read mode**

| Symbol | Parameter | Min | Typ. | Max | Unit |
|---|---|---|---|---|---|
| fSCL | SCL frequency (Read Mode) | | | 2.5 | MHz |
| tCSSU | Time CS# has to be low before the first rising edge of SCLK | 100 | | | ns |
| tCSHLD | Time CS# has to remain low after the last falling edge of SCLK | 50 | | | ns |
| tCSHIGH | Time CS# has to remain high between two transfers | 250 | | | ns |
| tSCLHIGH | Part of the clock period where SCL has to remain high | 180 | | | ns |
| tSCLLOW | Part of the clock period where SCL has to remain low | 180 | | | ns |
| tSOSU | Time SO(SDA Read Mode) will be stable before the next rising edge of SCL | | 50 | | ns |
| tSOHLD | Time SO (SDA Read Mode) will remain stable after the falling edge of SCL | | 0 | | ns |

GOOD DISPLAY

## 7.Command Table

| R/W# | D/C# | Hex | D7 | D6 | D5 | D4 | D3 | D2 | D1 | D0 | Command | Description |
|---|---|---|---|---|---|---|---|---|---|---|---|---|
| 0 | 0 | 01 | 0 | 0 | 0 | 0 | 0 | 0 | 0 | 1 | Driver Output control | Gate setting<br>Set A[8:0]=0127h<br>Set B[8:0]=00h |
| 0 | 1 | | A7 | A6 | A5 | A4 | A3 | A2 | A1 | A0 | | |
| 0 | 1 | | 0 | 0 | 0 | 0 | 0 | 0 | 0 | A8 | | |
| 0 | 1 | | 0 | 0 | 0 | 0 | 0 | B2 | B1 | B0 | | |
| 0 | 0 | 03 | 0 | 0 | 0 | 0 | 0 | 0 | 1 | 1 | Gate Driving voltage control | Set Gate Driving voltage<br>A[4:0]=17h[POR],VGH at 20V[POR]<br>VGH setting from 10V to 20V |
| 0 | 1 | | 0 | 0 | 0 | A4 | A3 | A2 | A1 | A0 | | |
| 0 | 0 | 04 | 0 | 0 | 0 | 0 | 0 | 1 | 0 | 0 | Source Driving voltage control | Set Source Driving voltage<br>A[7:0]= 41h[POR],VSH1 at 15V<br>B[7:0]=A Ch[POR],VSH2 at 5.4V<br>C[7:0]= 32h[POR], VSL at -15V |
| 0 | 1 | | A7 | A6 | A5 | A4 | A3 | A2 | A1 | A0 | | |
| 0 | 1 | | B7 | B6 | B5 | B4 | B3 | B2 | B1 | B0 | | |
| 0 | 1 | | C7 | C6 | C5 | C4 | C3 | C2 | C1 | C0 | | |
| 0 | 0 | 08 | 0 | 0 | 0 | 0 | 1 | 0 | 0 | 0 | Initial Code Setting OTP Program | Program Initial Code Setting<br>The command required CLKEN=1.<br>Refer to Register 0x22 for detail.<br>BUSY pad will output high during operation |
| 0 | 0 | 09 | 0 | 0 | 0 | 0 | 1 | 0 | 0 | 1 | Write Register for Initial Code Setting | Write Register for Initial Code Setting Selection<br>A[7:0] ~ D[7:0]: Reserved<br>Details refer to Application Notes of Initial Code Setting |
| 0 | 1 | | A7 | A6 | A5 | A4 | A3 | A2 | A1 | A0 | | |
| 0 | 1 | | B7 | B6 | B5 | B4 | B3 | B2 | B1 | B0 | | |
| 0 | 1 | | C7 | C6 | C5 | C4 | C3 | C2 | C1 | C0 | | |
| 0 | 1 | | D7 | D6 | D5 | D4 | D3 | D2 | D1 | D0 | | |
| 0 | 0 | 0A | 0 | 0 | 0 | 0 | 1 | 0 | 1 | 0 | Read Register for Initial Code Setting | Read Register for Initial Code Setting |
| 0 | 0 | 10 | 0 | 0 | 0 | 1 | 0 | 0 | 0 | 0 | Deep Sleep mode | Deep Sleep mode Control:<br>A[1:0] : Description<br>00 Normal Mode [POR]<br>01 Enter Deep Sleep Mode 1<br>11 Enter Deep Sleep Mode 2<br>After this command initiated, the chip will enter Deep Sleep Mode, BUSY pad will keep output high.<br>Remark:<br>To Exit Deep Sleep mode, User required to send HWRESET to the driver |
| 0 | 1 | | 0 | 0 | 0 | 0 | 0 | 0 | 0 | $A_0$ | | |
| 0 | 1 | | 0 | 0 | 0 | 0 | 0 | $A_2$ | $A_1$ | $A_0$ | | |
| 0 | 1 | | 1 | A6 | A5 | A4 | A3 | A2 | A1 | A0 | | |
| 0 | 1 | | 1 | B6 | B5 | B4 | B3 | B2 | B1 | B0 | | |
| 0 | 1 | | 1 | C6 | C5 | C4 | C3 | C2 | C1 | C0 | | |
| 0 | 1 | | 0 | 0 | D5 | D4 | D3 | D2 | D1 | D0 | | |

GOOD DISPLAY

| | | | | | | | | | | | | |
|---|---|---|---|---|---|---|---|---|---|---|---|---|
| 0 | 0 | 11 | 0 | 0 | 0 | 1 | 0 | 0 | 0 | 1 | Data Entry mode setting | Define data entry sequence<br>A[2:0] = 011 [POR]<br>A [1:0] = ID[1:0]<br>Address automatic increment / decrement setting<br>The setting of incrementing or decrementing of the address counter can be made independently in each upper and lower bit of the address.<br>00 – Y decrement, X decrement,<br>01 – Y decrement, X increment,<br>10 – Y increment, X decrement,<br>11 – Y increment, X increment [POR]<br>A[2] = AM<br>Set the direction in which the address counter is updated automatically after data are written to the RAM.<br>AM= 0, the address counter is updated in the X direction. [POR]<br>AM = 1, the address counter is updated in the Y direction |

GOOD DISPLAY

| | | | | | | | | | | | | |
|---|---|---|---|---|---|---|---|---|---|---|---|---|
| 0 | 0 | 0C | 0 | 0 | 0 | 0 | 1 | 1 | 0 | 0 | Booster Soft start Control | Booster Enable with Phase 1, Phase 2 and Phase 3 for soft start current and duration setting.<br>A[7:0] -> Soft start setting for Phase1<br>= 8Bh [POR]<br>B[7:0] -> Soft start setting for Phase2<br>= 9Ch [POR]<br>C[7:0] -> Soft start setting for Phase3<br>= 96h [POR]<br>D[7:0] -> Duration setting<br>= 0Fh [POR]<br>Bit Description of each byte:<br>A[6:0] / B[6:0] / C[6:0]:<br>Bit[6:4]<br>Driving Strength<br>Selection<br>000 1(Weakest)<br>001 2<br>010 3<br>011 4<br>100 5<br>101 6<br>110 7<br>111 8(Strongest)<br>Bit[3:0]<br>Min Off Time Setting of GDR<br>[ Time unit ]<br>0000<br>~<br>0011<br>NA<br>0100 2.6<br>0101 3.2<br>0110 3.9<br>0111 4.6<br>1000 5.4<br>1001 6.3<br>1010 7.3<br>1011 8.4<br>1100 9.8<br>1101 11.5<br>1110 13.8<br>1111 16.5<br>D[5:0]: duration setting of phase<br>D[5:4]: duration setting of phase 3<br>D[3:2]: duration setting of phase 2<br>D[1:0]: duration setting of phase 1<br>Bit[1:0]<br>Duration of Phase<br>[Approximation]<br>00 10ms<br>01 20ms<br>10 30ms<br>11 40ms |

GOOD DISPLAY

| | | | | | | | | | | | | |
|---|---|---|---|---|---|---|---|---|---|---|---|---|
| 0 | 0 | 12 | 0 | 0 | 0 | 1 | 0 | 0 | 1 | 0 | SWRESET | It resets the commands and parameters to their S/W Reset default values except R10h-Deep Sleep Mode<br>During operation, BUSY pad will output high.<br>Note: RAM are unaffected by this command. |
| 0 | 0 | 18 | 0 | 0 | 0 | 1 | 1 | 0 | 0 | 0 | Temperature Sensor Control | Temperature Sensor Selection<br>A[7:0] = 48h [POR], external temperature sensor<br>A[7:0] = 80h Internal temperature sensor |
| 0 | 1 | | A7 | A6 | A5 | A4 | A3 | A2 | A1 | A0 | | |
| 0 | 0 | 1A | 0 | 0 | 0 | 1 | 1 | 0 | 1 | 0 | Temperature Sensor Control (Write to temperature register)l | Write to temperature register.<br>A[11:0] = 7FFh [POR] |
| 0 | 1 | | A7 | A6 | A5 | A4 | A3 | A2 | A1 | A0 | | |
| 0 | 1 | | B7 | B6 | B5 | B4 | 0 | 0 | 0 | 0 | | |
| 0 | 0 | 20 | 0 | 0 | 1 | 0 | 0 | 0 | 0 | 0 | Master Activation | Activate Display Update Sequence<br>The Display Update Sequence Option is located at R22h<br>User should not interrupt this operation to avoid corruption of panel images. |
| 0 | 0 | 21 | 0 | 0 | 1 | 0 | 0 | 0 | 0 | 1 | Display Update Control 1 | RAM content option for Display Update<br>A[7:0] = 00h [POR]<br>B[7:0] = 00h [POR]<br>A[7:4] Red RAM option<br>0000 Normal<br>0100 Bypass RAM content as 0<br>1000 Inverse RAM content<br>A[3:0] BW RAM option<br>0000 Normal<br>0100 Bypass RAM content as 0<br>1000 Inverse RAM content<br>B[7] Source Output Mode<br>0 Available Source from S0 to S175<br>1 Available Source from S8 to S167 |
| 0 | 1 | | A7 | A6 | A5 | A4 | A3 | A2 | A1 | A0 | | |
| 0 | 1 | | B7 | 0 | 0 | 0 | 0 | 0 | 0 | 0 | | |

GOOD DISPLAY

| | | | | | | | | | | | | |
|---|---|---|---|---|---|---|---|---|---|---|---|---|
| 0 | 0 | 22 | 0 | 0 | 1 | 0 | 0 | 0 | 1 | 0 | Display Update Control 2 | Display Update Sequence Option:<br>Enable the stage for Master Activation<br>A[7:0]= FFh (POR)<br>Operating sequence<br>Parameter<br>(in Hex)<br>Enable clock signal 80<br>Disable clock signal 01<br>Enable clock signal<br>Enable Analog<br>C0<br>Disable Analog<br>Disable clock signal<br>03<br>Enable clock signal<br>Load LUT with DISPLAY Mode 1<br>Disable clock signal<br>91<br>Enable clock signal<br>Load LUT with DISPLAY Mode 2<br>Disable clock signal<br>99<br>Enable clock signal<br>Load temperature value<br>Load LUT with DISPLAY Mode 1<br>Disable clock signal<br>B1<br>Enable clock signal<br>Load temperature value<br>Load LUT with DISPLAY Mode 2<br>Disable clock signal<br>B9<br>Enable clock signal<br>Enable Analog<br>Display with DISPLAY Mode 1<br>Disable Analog<br>Disable OSC<br>C7<br>Enable clock signal<br>Enable Analog<br>Display with DISPLAY Mode 2<br>Disable Analog<br>Disable OSC<br>CF<br>Enable clock signal<br>Enable Analog<br>Load temperature value<br>DISPLAY with DISPLAY Mode 1<br>Disable Analog<br>Disable OSC<br>F7<br>Enable clock signal<br>Enable Analog<br>Load temperature value<br>DISPLAY with DISPLAY Mode 2 |
| 0 | 1 | | A7 | A6 | A5 | A4 | A3 | A2 | A1 | A0 | | |

GOOD DISPLAY

| | | | | | | | | | | | | |
|---|---|---|---|---|---|---|---|---|---|---|---|---|
| 0 | 0 | 24 | 0 | 0 | 1 | 0 | 0 | 1 | 0 | 0 | Write RAM (Black White) / RAM 0x24 | After this command, data entries will be written into the BW RAM until another command is written. Address pointers will advance accordingly<br>For Write pixel:<br>Content of Write RAM(BW) = 1<br>For Black pixel:<br>Content of Write RAM(BW) = 0 |
| 0 | 0 | 26 | 0 | 0 | 1 | 0 | 0 | 1 | 1 | 0 | Write RAM (RED) / RAM 0x26) | After this command, data entries will be written into the RED RAM until another command is written. Address pointers will advance accordingly.<br>For Red pixel:<br>Content of Write RAM(RED) = 1<br>For non-Red pixel [Black or White]:<br>Content of Write RAM(RED) = 0 |
| 0 | 0 | 2C | 0 | 0 | 1 | 0 | 1 | 1 | 0 | 0 | Write VCOM register | Write VCOM register from MCU interface<br>A[7:0] = 00h [POR] |
| 0 | 1 | | A7 | A6 | A5 | A4 | A3 | A2 | A1 | A0 | | |
| 0 | 0 | 2D | 0 | 0 | 1 | 0 | 1 | 1 | 0 | 1 | OTP Register Read for Display Option | Read Register for Display Option:<br>A[7:0]: VCOM OTP Selection<br>(Command 0x37, Byte A)<br>B[7:0]: VCOM Register<br>(Command 0x2C)<br>C[7:0]~G[7:0]: Display Mode<br>(Command 0x37, Byte B to Byte F)<br>[5 bytes]<br>H[7:0]~K[7:0]: Waveform Version<br>(Command 0x37, Byte G to Byte J)<br>[4 bytes] |
| 1 | 1 | | A7 | A6 | A5 | A4 | A3 | A2 | A1 | A0 | | |
| 1 | 1 | | B7 | B6 | B5 | B4 | B3 | B2 | B1 | B0 | | |
| 1 | 1 | | C7 | C6 | C5 | C4 | C3 | C2 | C1 | C0 | | |
| 1 | 1 | | D7 | D6 | D5 | D4 | D3 | D2 | D1 | D0 | | |
| 1 | 1 | | E7 | E6 | E5 | E4 | E3 | E2 | E1 | E0 | | |
| 1 | 1 | | F7 | F6 | F5 | F4 | F3 | F2 | F1 | F0 | | |
| 1 | 1 | | G7 | G6 | G5 | G4 | G3 | G2 | G1 | G0 | | |
| 1 | 1 | | H7 | H6 | H5 | H4 | H3 | H2 | H1 | H0 | | |
| 1 | 1 | | I7 | I6 | I5 | I4 | I3 | I2 | I1 | I0 | | |
| 1 | 1 | | J7 | J6 | J5 | J4 | J3 | J2 | J1 | J0 | | |
| 1 | 1 | | K7 | K6 | K5 | K4 | K3 | K2 | K1 | K0 | | |

GOODDISPLAY

| | | | | | | | | | | | | |
|---|---|---|---|---|---|---|---|---|---|---|---|---|
| 0 | 0 | 2F | 0 | 0 | 1 | 0 | 1 | 1 | 1 | 1 | Status Bit Read | Read IC status Bit [POR 0x01]<br>A[5]: HV Ready Detection flag [POR=0]<br>0: Ready<br>1: Not Ready<br>A[4]: VCI Detection flag [POR=0]<br>0: Normal<br>1: VCI lower than the Detect level<br>A[3]: [POR=0]<br>A[2]: Busy flag [POR=0]<br>0: Normal<br>1: BUSY<br>A[1:0]: Chip ID [POR=01]<br>Remark:<br>A[5] and A[4] status are not valid after RESET, they need to be initiated by command 0x14 and command 0x15 respectively |
| 0 | 0 | 30 | 0 | 0 | 1 | 1 | 0 | 0 | 0 | 0 | Program WS OTP | Program OTP of Waveform Setting<br>The contents should be written into RAM before sending this command.<br>The command required CLKEN=1.<br>Refer to Register 0x22 for detail.<br>BUSY pad will output high during operation |
| 0 | 0 | 32 | 0 | 0 | 1 | 1 | 0 | 0 | 1 | 0 | Write LUT register | Write LUT register from MCU interface [153 bytes], which contains the content of VS[nX-LUTm], TP[nX], RP[n], SR[nXY], FR[n] and XON[nXY]<br>Refer to Session 6.7 WAVEFORM SETTING |
| 0 | 1 | | A7 | A6 | A5 | A4 | A3 | A2 | A1 | A0 | | |
| 0 | 1 | | B7 | B6 | B5 | B4 | B3 | B2 | B1 | B0 | | |
| 0 | 1 | | : | : | : | : | : | : | : | : | | |
| 0 | 1 | | : | : | : | : | : | : | : | : | | |
| 0 | 1 | | : | : | : | : | : | : | : | : | | |
| 0 | 1 | | : | : | : | : | : | : | : | : | | |
| 0 | 0 | 39 | 0 | 0 | 1 | 1 | 1 | 0 | 0 | 1 | OTP program mode | OTP program mode<br>A[1:0] = 00: Normal Mode [POR]<br>A[1:0] = 11: Internal generated OTP programming voltage<br>Remark: User is required to EXACTLY follow the reference code sequences |

| | | | | | | | | | | | | |
|---|---|---|---|---|---|---|---|---|---|---|---|---|
| 0 | 0 | 3C | 0 | 0 | 1 | 1 | 1 | 1 | 0 | 0 | | Select border waveform for VBD<br>A[7:0] = C0h [POR], set VBD as HIZ.<br>A [7:6] :Select VBD option<br>A[7:6] Select VBD as<br>00 GS Transition,<br>Defined in A[2] and<br>A[1:0]<br>01 Fix Level,<br>Defined in A[5:4]<br>10 VCOM<br>11[POR] HiZ<br>A [5:4] Fix Level Setting for VBD<br>A[5:4] VBD level<br>00 VSS<br>01 VSH1<br>10 VSL<br>11 VSH2<br>A[2] GS Transition control<br>A[2] GS Transition control<br>0 Follow LUT<br>(Output VCOM @ RED)<br>1 Follow LUT<br>A [1:0] GS Transition setting for VBD<br>A[1:0] VBD Transition<br>00 LUT0<br>01 LUT1<br>10 LUT2<br>11 LUT3 |
| 0 | 1 | | $A_7$ | $A_6$ | $A_5$ | $A_4$ | 0 | 0 | $A_1$ | $A_0$ | | |
| 0 | 0 | 44 | 0 | 1 | 0 | 0 | 0 | 1 | 0 | 0 | Set RAM X - address Start / End position | Specify the start/end positions of the window address in the X direction by an address unit<br>A[4:0]: XSA[4:0], X Start, POR = 00h<br>B[4:0]: XEA[4:0], X End, POR = 14h |
| 0 | 1 | | 0 | 0 | 0 | $A_4$ | $A_3$ | $A_2$ | $A_1$ | $A_0$ | | |
| 0 | 1 | | 0 | 0 | 0 | $B_4$ | $B_3$ | $B_2$ | $B_1$ | $B_0$ | | |
| 0 | 0 | 45 | 0 | 1 | 0 | 0 | 0 | 1 | 0 | 1 | Set Ram Y- address Start / End position | Specify the start/end positions of the window address in the Y direction by an address unit<br>A[8:0]: YSA[8:0], Y Start, POR = 0127h<br>B[8:0]: YEA[8:0], Y End, POR = 0000h |
| 0 | 1 | | $A_7$ | $A_6$ | $A_5$ | $A_4$ | $A_3$ | $A_2$ | $A_1$ | $A_0$ | | |
| 0 | 1 | | 0 | 0 | 0 | 0 | 0 | 0 | 0 | $A_8$ | | |
| 0 | 1 | | $B_7$ | $B_6$ | $B_5$ | $B_4$ | $B_3$ | $B_2$ | $B_1$ | $B_0$ | | |
| 0 | 1 | | 0 | 0 | 0 | 0 | 0 | 0 | 0 | $B_8$ | | |
| 0 | 0 | 4E | 0 | 1 | 0 | 0 | 1 | 1 | 1 | 0 | Set RAM X address counter | Make initial settings for the RAM X address in the address counter (AC)<br>A[4:0]: XAD[4:0], POR is 00h |
| 0 | 1 | | 0 | 0 | 0 | $A_4$ | $A_3$ | $A_2$ | $A_1$ | $A_0$ | | |
| 0 | 0 | 4F | 0 | 1 | 0 | 0 | 1 | 1 | 1 | 1 | Set RAM Y address counter | Make initial settings for the RAM Y address in the address counter (AC)<br>A[8:0]: YAD[8:0], POR is 0127h |
| 0 | 1 | | $A_7$ | $A_6$ | $A_5$ | $A_4$ | $A_3$ | $A_2$ | $A_1$ | $A_0$ | | |
| 0 | 1 | | 0 | 0 | 0 | 0 | 0 | 0 | 0 | $A_8$ | | |

GOOD DISPLAY

## 8. Optical Specification

Measurements are made with that the illumination is under an angle of 45 degree, the detection is perpendicular unless otherwise specified

| Symbol | Parameter | Conditions | Min | Typ. | Max | Units | Notes |
|---|---|---|---|---|---|---|---|
| R | White Reflectivity | White | 30 | 35 | - | % | 8-1 |
| CR | Contrast Ratio | indoor | 8:1 | | - | | 8-2 |
| GN | 2Grey Level | - | - | | | | |
| T update | Image update time | at 25 °C | - | 3 | - | sec | |
| Life | | 23±3℃<br>55±10%RH | | 5years | | | 8-3 |

**Notes:**

8-1. Luminance meter: Eye-One Pro Spectrophotometer.

8-2. CR=Surface Reflectance with all white pixel/Surface Reflectance with all black pixels.

8-3 When the product is stored. The display screen should be kept white and face up.

## 9. Handling Safety and Environment Requirements

**Warning**

The display glass may break when it is dropped or bumped on a hard surface. Handle with care. Should the display break, do not touch the electrophoretic material. In case of contact with electrophoretic material, wash with water and soap.

**Caution**

The display module should not be exposed to harmful gases, such as acid and alkali gases, which corrode electronic components. Disassembling the display module.
Disassembling the display module can cause permanent damage and invalidates the warranty agreements.
Observe general precautions that are common to handling delicate electronic components. The glass can break and front surfaces can easily be damaged. Moreover the display is sensitive to static electricity and other rough environmental conditions.

**Data sheet status**

Product specification: This data sheet contains final product specifications.

**imiting values**

Limiting values given are in accordance with the Absolute Maximum Rating System (IEC 134). Stress above one or more of the limiting values may cause permanent damage to the device. These are stress ratings only and operation of the device at these or at any other conditions above those given in the Characteristics sections of the specification is not implied. Exposure to limiting values for extended periods may affect device reliability.

**Application information**

Where application information is given, it is advisory and does not form part of the specification.

GOOD DISPLAY

## 10. Reliability Test

| NO | Test items | Test condition |
|---|---|---|
| 1 | Low-Temperature Storage | T = -25°C, 240 h<br>Test in white pattern |
| 2 | High-Temperature Storage | T = +70°C, RH=40% ,240h<br>Test in white pattern |
| 3 | High-Temperature Operation | T = +50°C, RH = 30% ,240h |
| 4 | Low-Temperature Operation | 0ºC，240h |
| 5 | High-Temperature, High-Humidity Operation | T=+40ºC，RH=90%,240h |
| 6 | High Temperature, High Humidity Storage | T=+60ºC，RH=80%,240h<br>Test in white pattern |
| 7 | Temperature Cycle | 1 cycle:[-25°C 30min]→[+70 °C 30 min] : 100 cycles<br>Test in white pattern |
| 8 | UV exposure Resistance | 765W/m² for 168hrs,40 °C<br>Test in white pattern |
| 9 | ESD Gun | Air+/-15KV;Contact+/-8KV<br>(Test finished product shell, not display only)<br>Air+/-8KV;Contact+/-6KV<br>(Naked EPD display, no including IC and FPC area)<br>Air+/-4KV;Contact+/-2KV<br>(Naked EPD display, including IC and FPC area) |

**Note:** Put in normal temperature for 1hour after test finished, display performance is ok.

GOODDISPLAY

## 11. Block Diagram

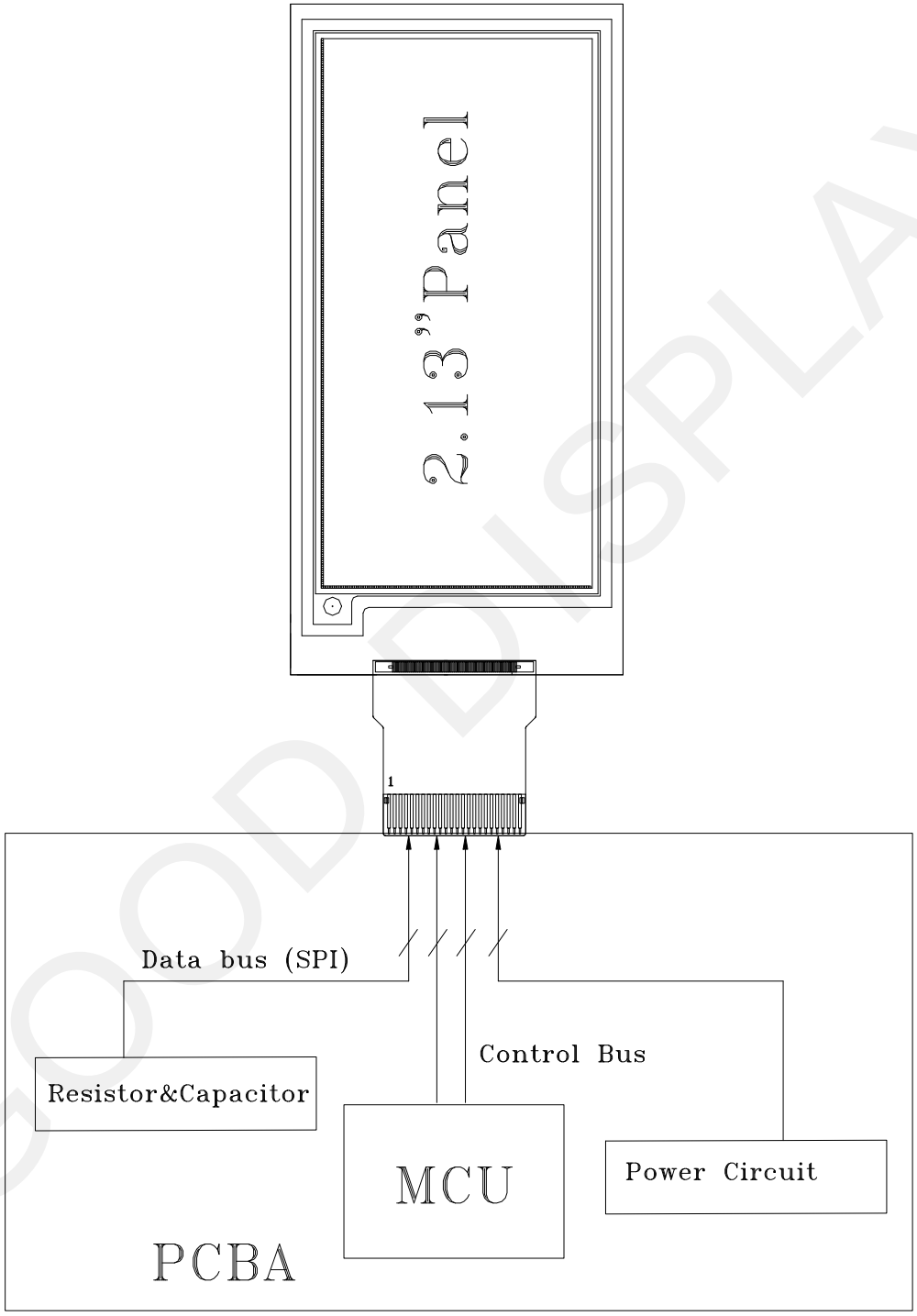


GOOD DISPLAY

## 12. Typical Application Circuit with SPI Interface

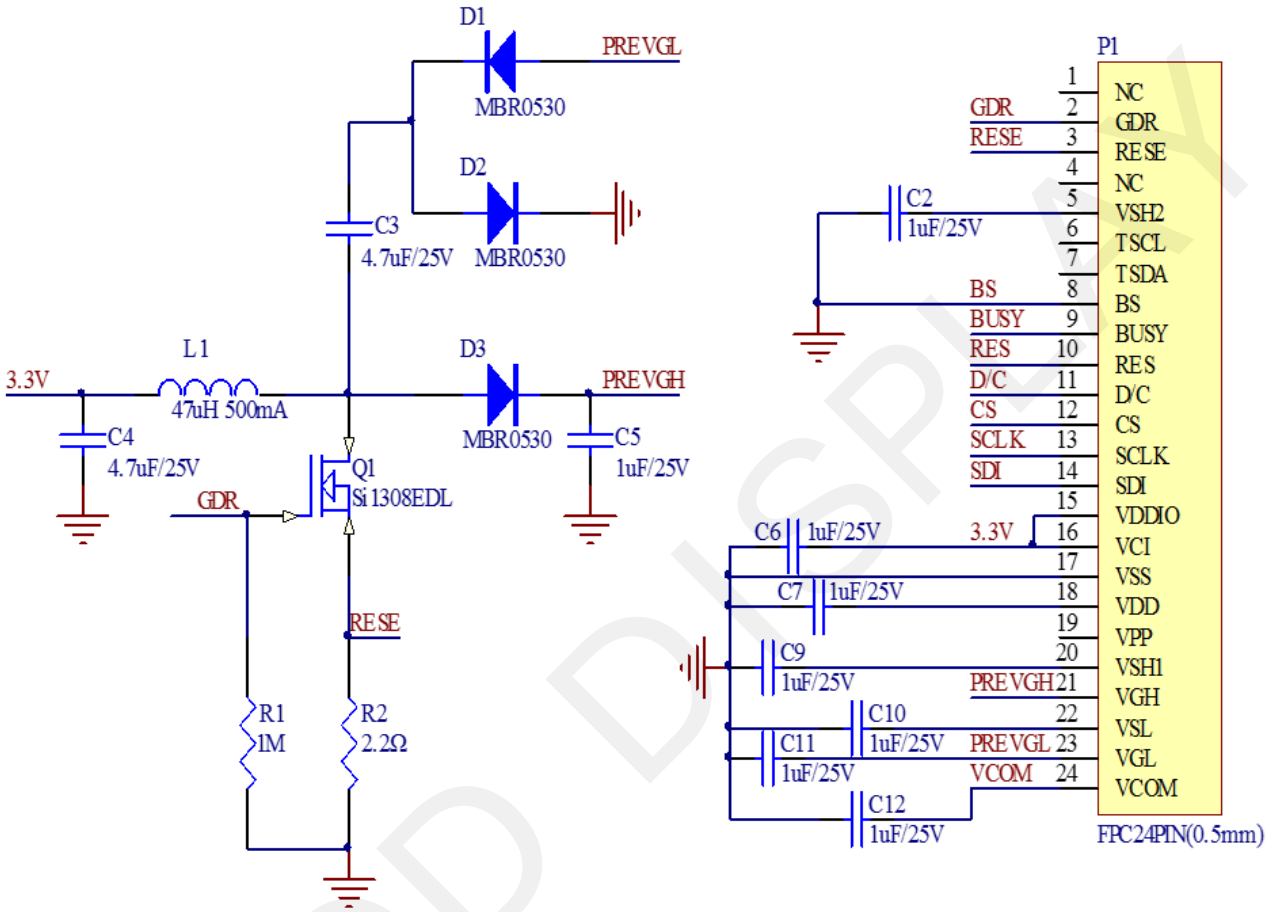


| Part Name | Requirements for spare part |
|---|---|
| C1—C12 | 0603/0805; X5R/X7R;Voltage Rating:≥25V |
| R1、R2 | 0603/0805;1% variation,≥0.05W |
| D1—D3 | MBR0530: 1)Reverse DC Voltage≥30V 2)Io≥500mA 3)Forward voltage ≤430mV |
| Q1 | Si1308EDL:1)Drain-Source breakdown voltage≥30V 2)Vgs(th)≤1.5V 3)Rds(on)≤400mΩ |
| L1 | refer to NR3015: Io=500mA(max) |
| P1 | 24pins,0.5mm pitch |

## 13. Matched Development Kit

Our Development Kit designed for SPI E-paper Display aims to help users to learn how to use E-paper Display more easily. It can refresh black-white E-paper Display and three-color (black, white and red/Yellow) Good Display 's E-paper Display. And it is also added the functions of USB serial port, Raspberry Pi and LED indicator light ect.
DESPI Development Kit consists of the development board and the pinboard.

More details about the Development Kit, please click to the following link:

http://www.good-display.com/companyfile/Development-Board-8

GOOD DISPLAY

## 14 Typical Operating Sequence

### 14.1 OTP Operation Flow

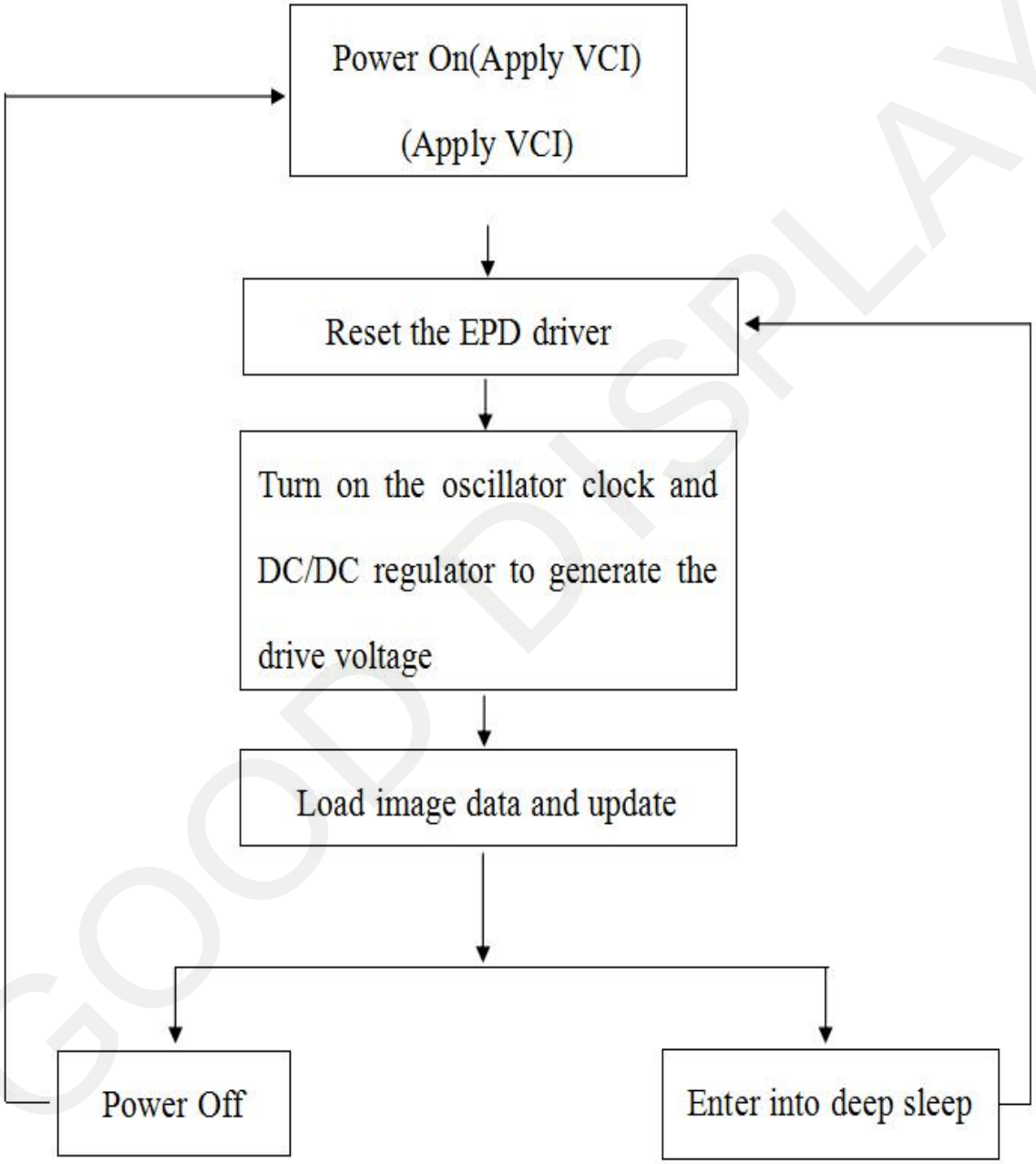


GOOD DISPLAY

## 14.2 OTP Operation Reference Program Code

| ACTION | VALUE/DATA | COMMENT |
|---|---|---|
| POWER ON | | |
| delay | 10ms | |
| PIN CONFIG | | |
| RESE# | low | Hardware reset |
| delay | 200us | |
| RESE# | high | |
| delay | 200us | |
| Read busy pin | | Wait for busy low |
| Command 0x12 | | Software reset |
| Read busy pin | | Wait for busy low |
| SET VOLTAGE AND LOAD LUT | | |
| LOAD IMAGE AND UPDATE | | |
| Command 0x24 | 4000bytes | Load image (128/8*250)(BW) |
| Command 0x20 | | |
| Read busy pin | | Wait for busy low |
| Command 0x10 | Data 0X01 | Enter deep sleep mode |
| POWER OFF | | |

GOOD DISPLAY

## 15. Inspection condition

### 15.1 Environment

Temperature: 23±3℃ Humidity: 55±10%RH

### 15.2 Illuminance

Brightness:1200～1500LUX;distance:20-30CM;Angle:Relate 45°surround.

### 15.3 Inspect method

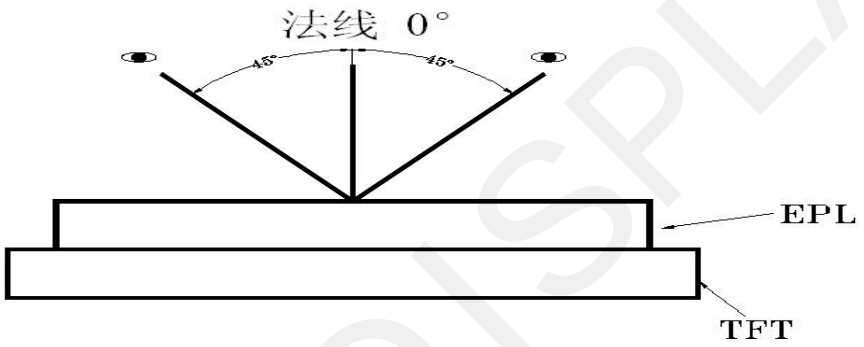


GOOD DISPLAY

## 15.4 Display area

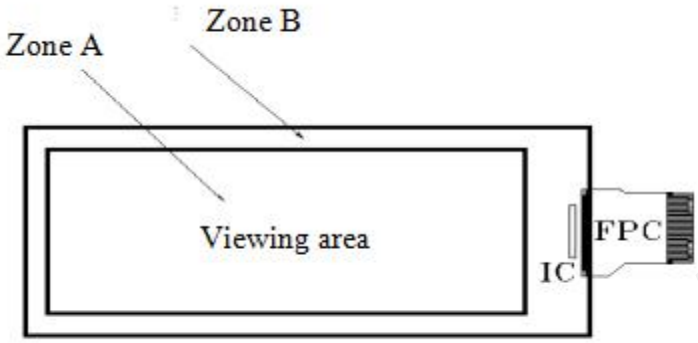


## 15.5 Inspection standard

### 15.5.1 Electric inspection standard

| NO. | Item | Standard | Defect level | Method | Scope |
|---|---|---|---|---|---|
| 1 | Dispay | Display complete<br>Display uniform | MA | Visual inspection | Zone A |
| 2 | Black/White spots | 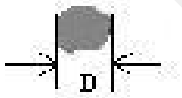 <br>D≤0.25mm，Allowed<br>0.25mm＜D≤0.4mm。N≤4， and Distance≥5mm<br>0.4mm＜D Not Allow | MI | | |
| 3 | Black/White spots (No switch) | 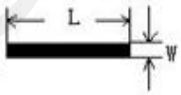 <br>L≤0.4mm，W≤0.1mm negligible<br>0.4mm＜L≤1.0mm<br>0.1mm＜W≤0.4mm<br>N≤4 allowable<br>L>1.0mm,W＞0.4mm，Not Allow | | Visual/ Inspection card | |
| 4 | Ghost image | Allowed in switching process | MI | Visual inspection | |

GOOD DISPLAY

| | | | | | |
|---|---|---|---|---|---|
| 5 | Flash spots/ Larger FPL size | Flash spots in switching, Allowed FPL size larger than viewing area, Allowed | MI | Visual/ Inspection card | Zone A Zone B |
| 6 | Display wrong/Missing | All appointed displays are showed correct | MA | Visual inspection | Zone A |
| 7 | Short circuit/ Circuit break/ Display abnormal | Not Allow | | | |

## 15.5.2 Appearance inspection standard

| NO. | Item | Standard | Defect level | Method | Scope |
|---|---|---|---|---|---|
| 1 | B/W spots /Bubble/ Foreign bodies/ Dents | 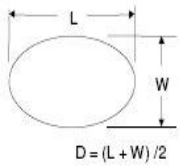 D≤0.25mm，negligible<br>0.25mmD≤0.4mm，N≤4 Allowed<br>D＞0.4mm，Not Allow | MI | Visual inspection | Zone A |
| 2 | Glass crack | Not Allow | MA | Visual / Microscope | Zone A Zone B |
| 3 | Dirty | Allowed if can be removed | MI | | Zone A Zone B |
| 4 | Chips/Scratch/ Edge crown | 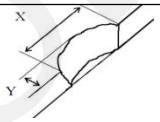 X≤3mm,Y≤0.5mmAnd without affecting the electrode is permissible<br> 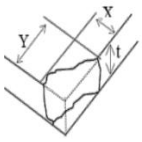 2mm≤X or 2mm≤Y Not Allow<br> 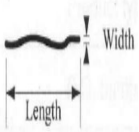 W≤0.1mm,L≤5mm, No harm to the electrodes and N≤2 allow | MI | Visual / Microscope | Zone A Zone B |

GOOD DISPLAY

| | | | | | |
|---|---|---|---|---|---|
| 5 | TFT Cracks | Not Allow | MA | Visual / Microscope | Zone A Zone B |
| 6 | Dirty/ foreign body | Allowed if can be removed/ allow | MI | Visual / Microscope | Zone A / Zone B |
| 7 | FPC broken/ Goldfingers xidation/ scratch | 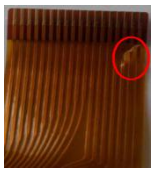 Not Allow | MA | Visual / Microscope | Zone B |
| 8 | TFT edge bulge /TFT chromatic aberration | TFT edge bulge：<br>X≤3mm，Y≤0.3mm Allowed<br>TFT chromatic aberration :Allowed | MI | Visual / Microscope | Zone A Zone B |
| 9 | PCB damaged/ Poor welding/ Curl | PCB（Circuit area）damaged Not Allow<br>PCB Poor welding Not Allow<br>PCB Curl≤1% | MI | Visual / Ruler | Zone B |
| 10 | Edge glue height/ Edge glue bubble | Edge Adhesives H≤PS surface (Including protect film) Edge adhesives seep in≤1/2 Margin width Length excluding<br>Edge adhesives bubble：bubble Width<br>≤1/2 Margin width；Length ≤5.0mm。n≤5 | | | |
| 11 | Protect film | Surface scratch but not effect protect function, Allowed | | Visual Inspection | |
| 12 | Silicon glue | Thickness≤PS surface(With protect film): Full cover the IC;<br>Shape:<br>The width on the FPC ≤ 0.5mm (Front)<br>The width on the FPC≤1.0mm (Back)<br>smooth surface,No obvious raised. | MI | Visual Inspection | |
| 13 | Warp degree (TFT substrate) | 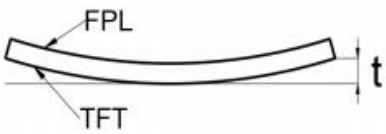  t≤1.0mm | MI | Ruler | |
| 14 | Color difference in COM area (Silver point area) | Allowed | | Visual Inspection | |

GOOD DISPLAY

## 16. Packing

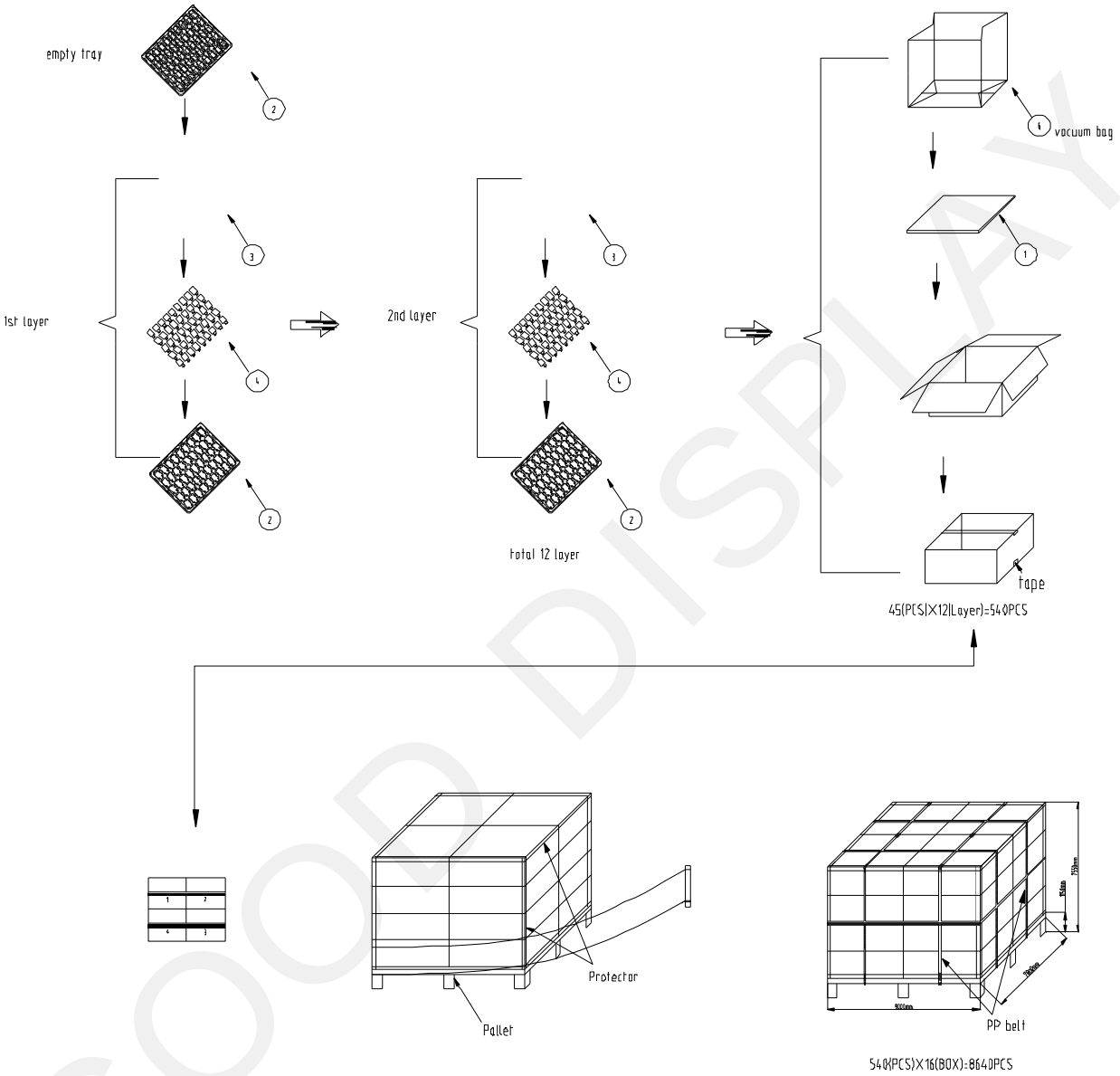


GOOD DISPLAY

## 17. Precautions

(1) Do not apply pressure to the EPD panel in order to prevent damaging it.

(2) Do not connect or disconnect the interface connector while the EPD panel is in operation.

(3) Do not touch IC bonding area. It may scratch TFT lead or damage IC function.

(4) Please be mindful of moisture to avoid its penetration into the EPD panel, which may cause damage during operation.

(5) High temperature, high humidity, sunlight or fluorescent light may degrade the EPD panel's performance. Please do not expose the unprotected EPD panel to high temperature, high humidity, sunlight, or fluorescent for long periods of time.

(6) For more precautions, please click on the link:
*http://www.good-display.com/news/Precautions-for-E-paper-Display-80.html*

GOOD DISPLAY