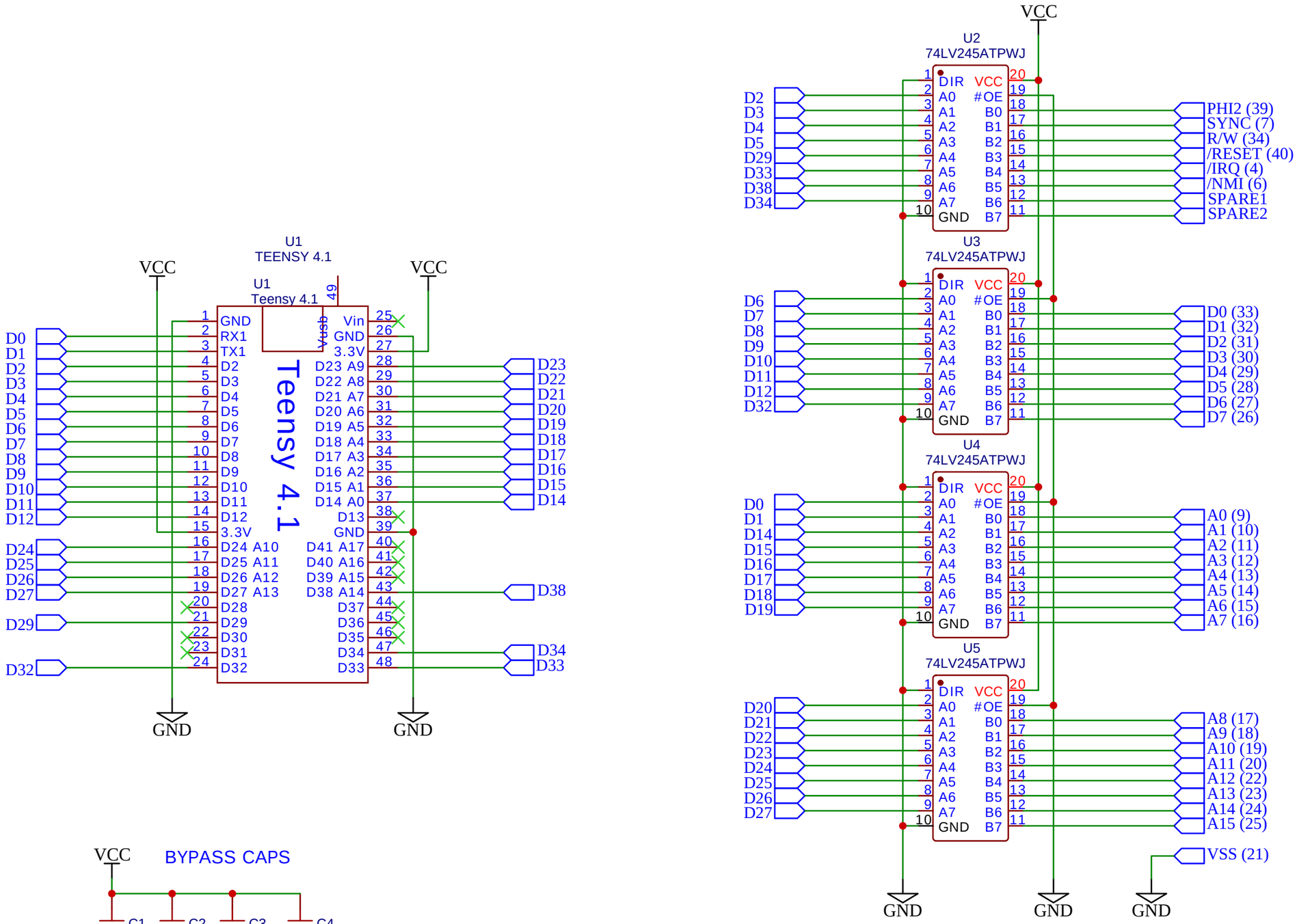

TITLE: 6502 Logic Analyzer		REV: 0.1
EasyEDA	Company: Jeff Tranter	Sheet: 1/1
	Date: 2021-03-13 Drawn By: JJT	