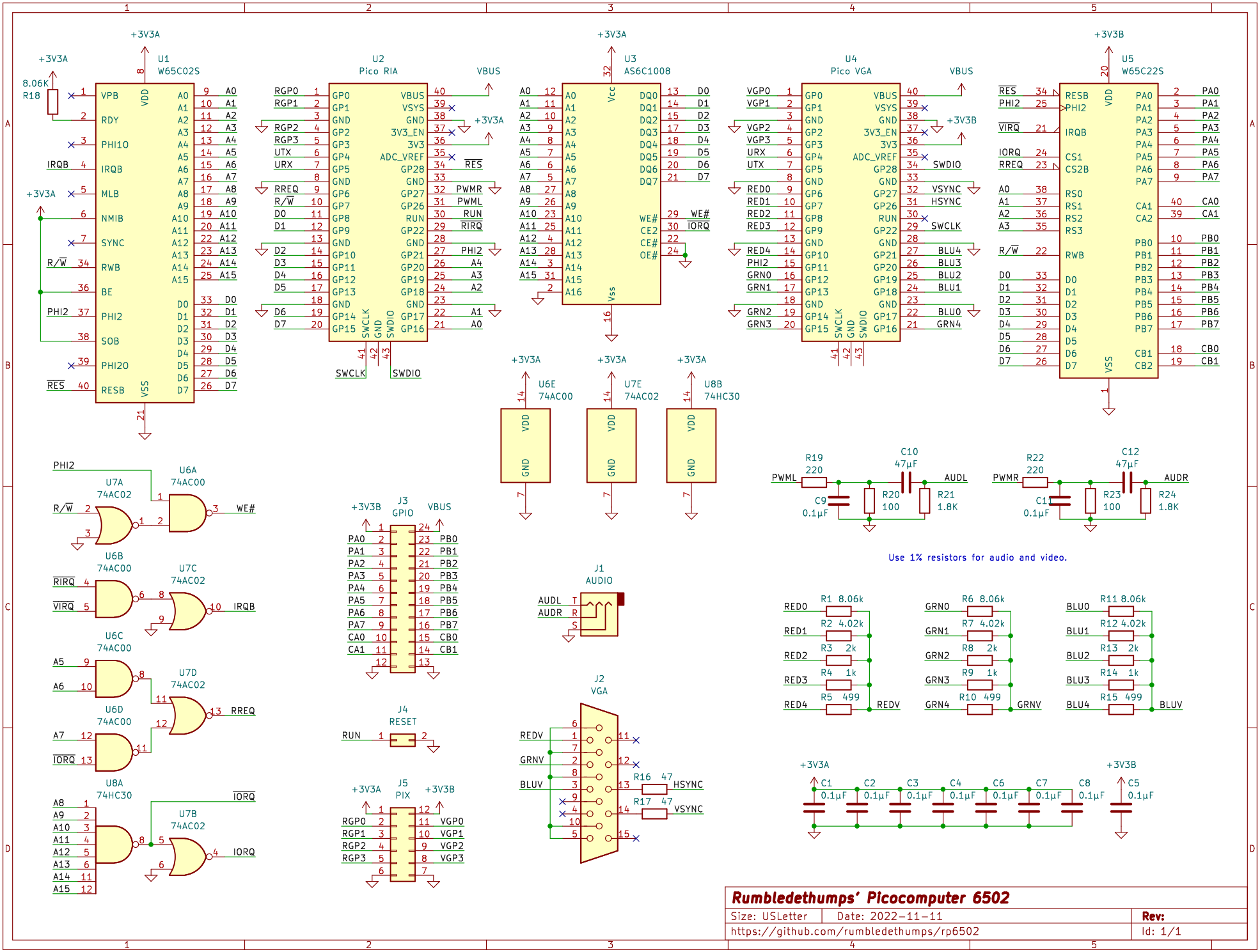
U1 W65C02S
U2 Pico RIA
U3 AS6C1008
U4 Pico VGA
U5 W65C22S
U6E 74AC00
U7E 74AC02
U8B 74HC30
U7A 74AC02
U6A 74AC00
U6B 74AC00
U7C 74AC02
U6C 74AC00
U7D 74AC02
U6D 74AC00
U8A 74HC30
U7B 74AC02
J3 GPIO
J1 AUDIO
J2 VGA
J4 RESET
J5 PIX
R19 220
C10 47µF
R20 100
R21 1.8K
C9 0.1µF
R22 220
C12 47µF
R23 100
R24 1.8K
C11 0.1µF
Use 1% resistors for audio and video.
R1 8.06k
R2 4.02k
R3 2k
R4 1k
R5 499
R6 8.06k
R7 4.02k
R8 2k
R9 1k
R10 499
R11 8.06k
R12 4.02k
R13 2k
R14 1k
R15 499
R16 47
R17 47
C1 0.1µF
C2 0.1µF
C3 0.1µF
C4 0.1µF
C6 0.1µF
C7 0.1µF
C8 0.1µF
C5 0.1µF
8.06K R18
+3V3A
+3V3B
VBUS
Rumbledethumps' Picocomputer 6502
Size: USLetter
Date: 2022-11-11
Rev:
https://github.com/rumbledethumps/rp6502
Id: 1/1