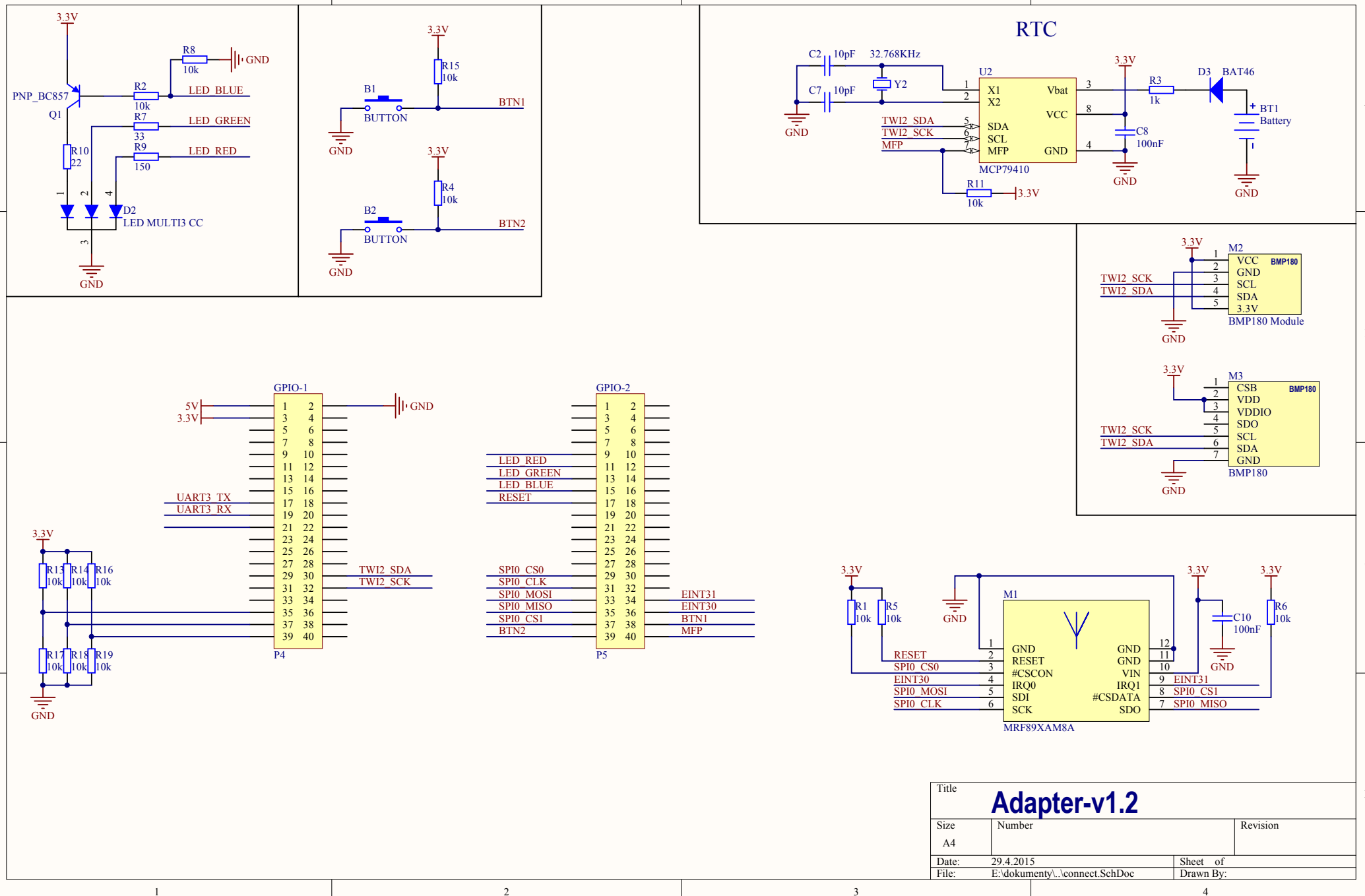
RTC
3.3V
PNP_BC857
Q1
R8
10k
GND
R2
10k
LED_BLUE
R7
33
LED_GREEN
R10
22
R9
150
LED_RED
D2
LED MULTI3 CC
B1
BUTTON
R15
10k
BTN1
B2
BUTTON
R4
10k
BTN2
C2 10pF
C7 10pF
32.768KHz
Y2
U2
X1
X2
Vbat
VCC
SDA
SCL
MFP
GND
MCP79410
TWI2_SDA
TWI2_SCK
MFP
R11
10k
R3
1k
D3 BAT46
BT1
Battery
C8
100nF
M2
VCC
GND
SCL
SDA
3.3V
BMP180
BMP180 Module
M3
CSB
VDD
VDDIO
SDO
SCL
SDA
GND
BMP180
GPIO-1
P4
5V
UART3_TX
UART3_RX
GPIO-2
P5
LED_RED
LED_GREEN
LED_BLUE
RESET
SPI0_CS0
SPI0_CLK
SPI0_MOSI
SPI0_MISO
SPI0_CS1
BTN2
EINT31
EINT30
BTN1
MFP
R13 10k
R14 10k
R16 10k
R17 10k
R18 10k
R19 10k
R1 10k
R5 10k
M1
MRF89XAM8A
#CSCON
IRQ0
IRQ1
#CSDATA
VIN
C10
100nF
R6
10k
Title
Adapter-v1.2
Size
A4
Number
Revision
Date: 29.4.2015
Sheet of
File: E:\dokumenty\..\connect.SchDoc
Drawn By:

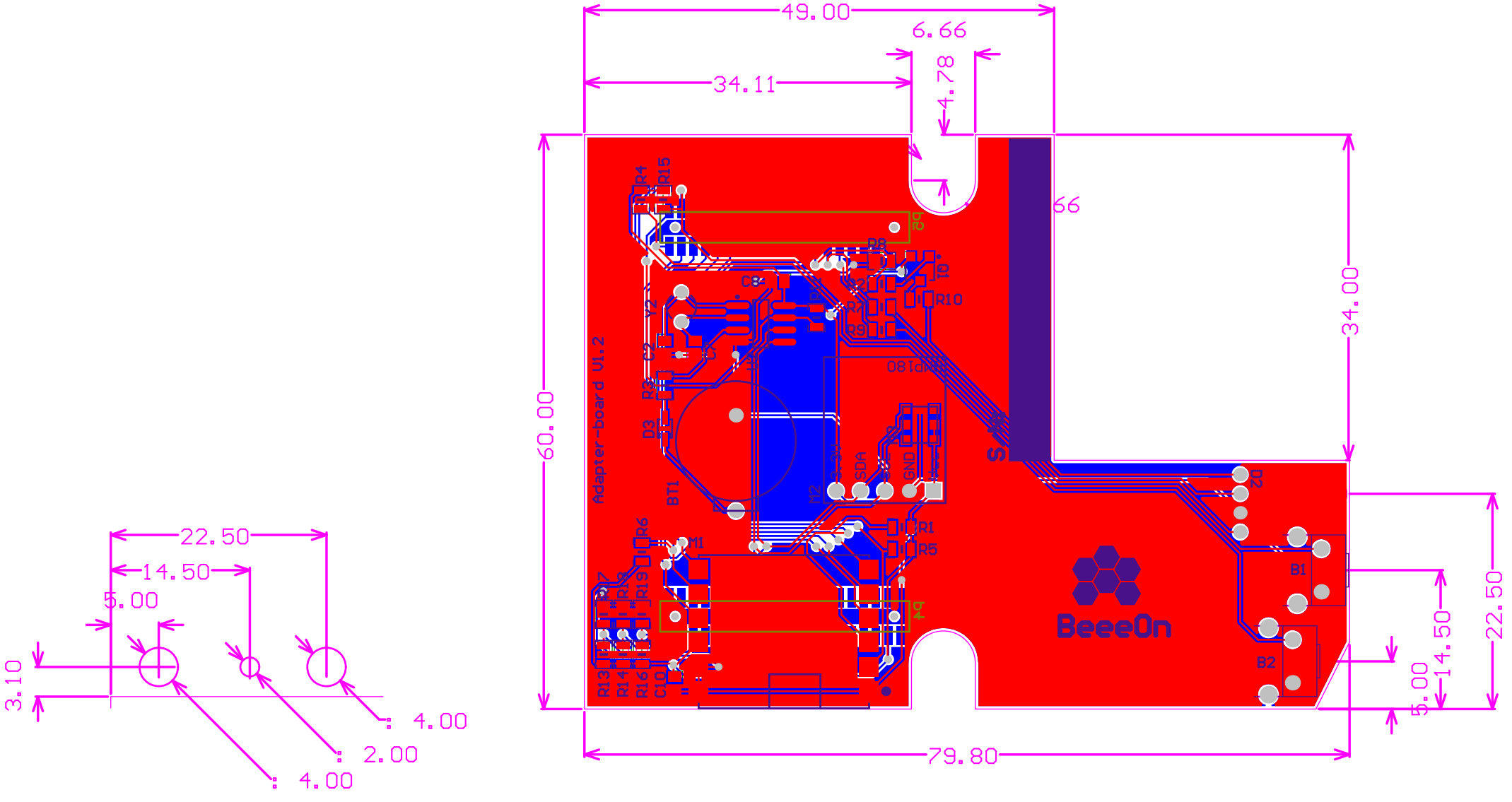
49.00
6.66
34.11
4.78
66
34.00
60.00
79.80
22.50
14.50
5.00
3.10
4.00
2.00
4.00
Adapter-board V1.2
BeeeOn
SDA
GND
R4
R15
R8
R9
R10
C8
Y2
C2
R3
D3
BT1
T2
M1
R6
R7
R18
R19
R13
R14
R16
C10
R1
R5
B1
B2
D2