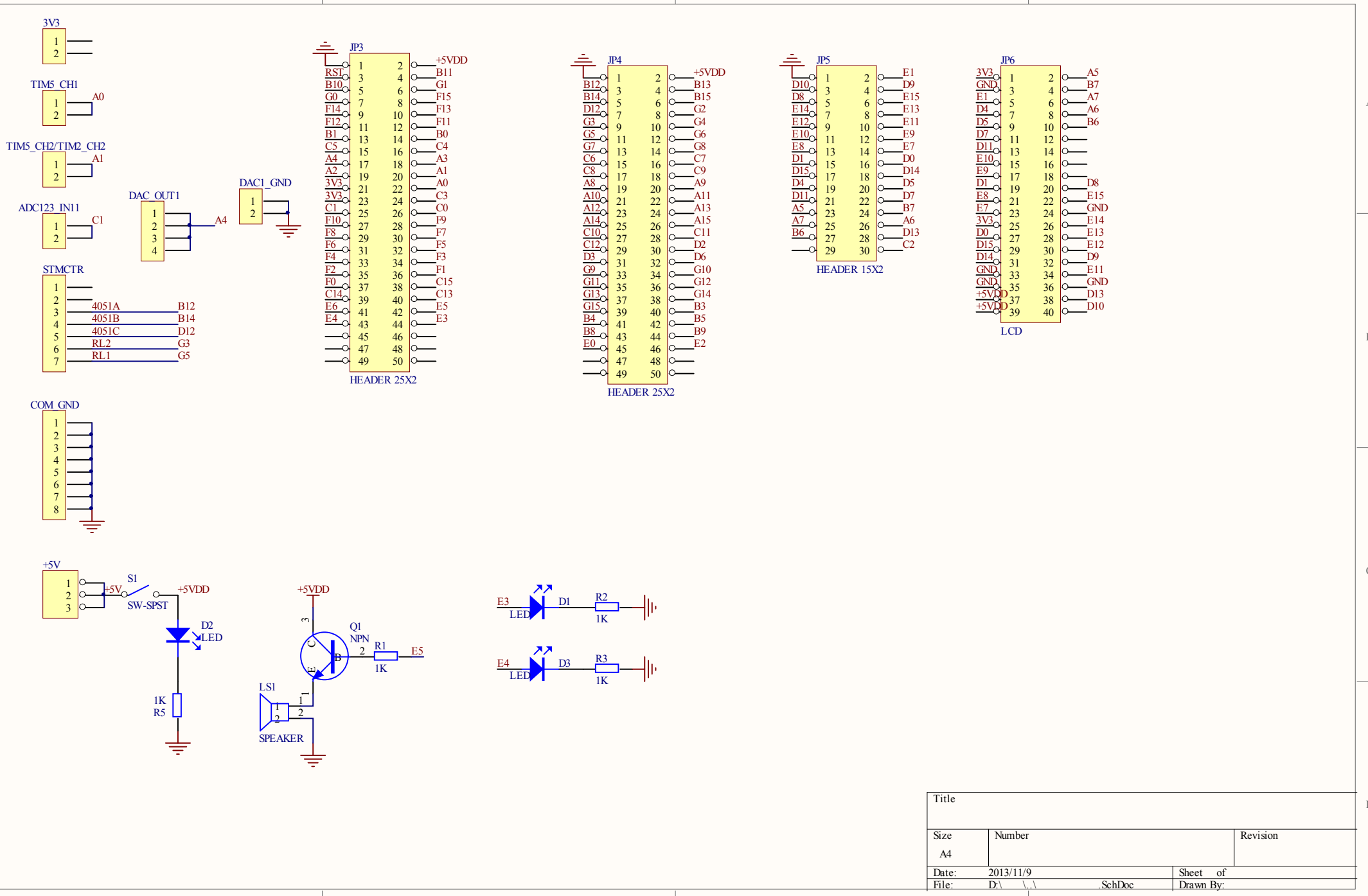

Title		
Size A4	Number	Revision
Date: 2013/11/9		Sheet of
File: D:\ \..\ .SchDoc		Drawn By: