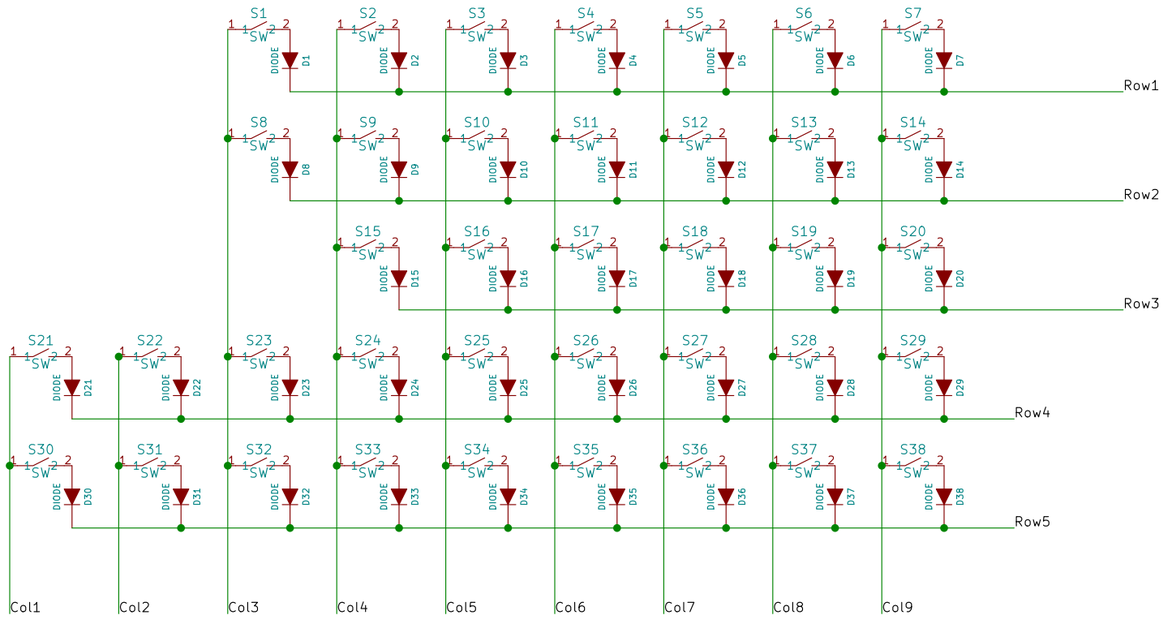

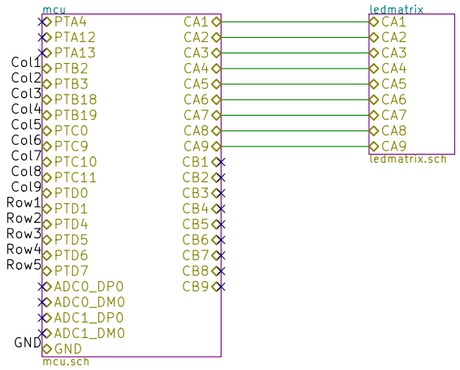

Input Club

Sheet: /

File: ICEDRight.sch

Title: ICED-R

Size: A3	Date: 2015-08-07	**Rev: Rev 1.1d**
KiCad E.D.A. kicad (2015-09-26 BZR 6224)-product		Id: 1/3

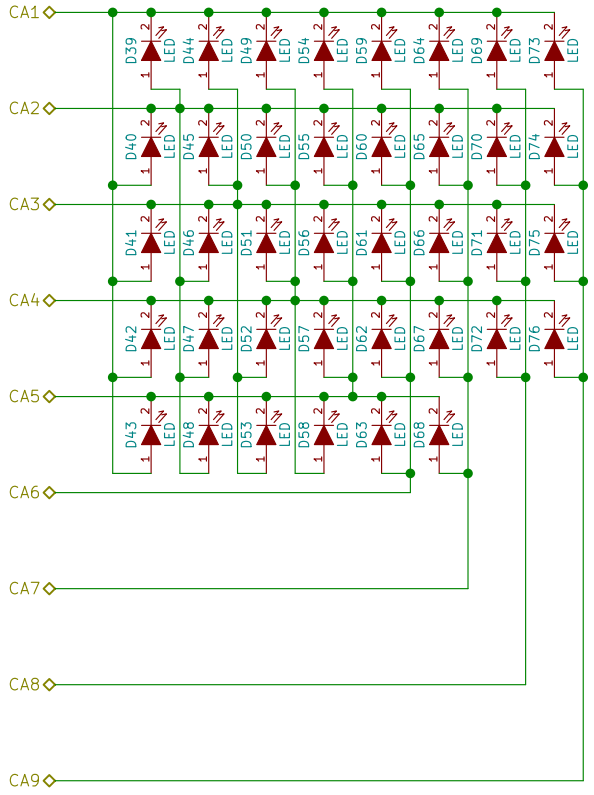

Input Club

Sheet: /ledmatrix/
File: ledmatrix.sch

Title: ICED-R

Size: A4	Date: 2015-08-07	**Rev: Rev 1.1d**
KiCad E.D.A. kicad (2015-09-26 BZR 6224)-product		Id: 2/3

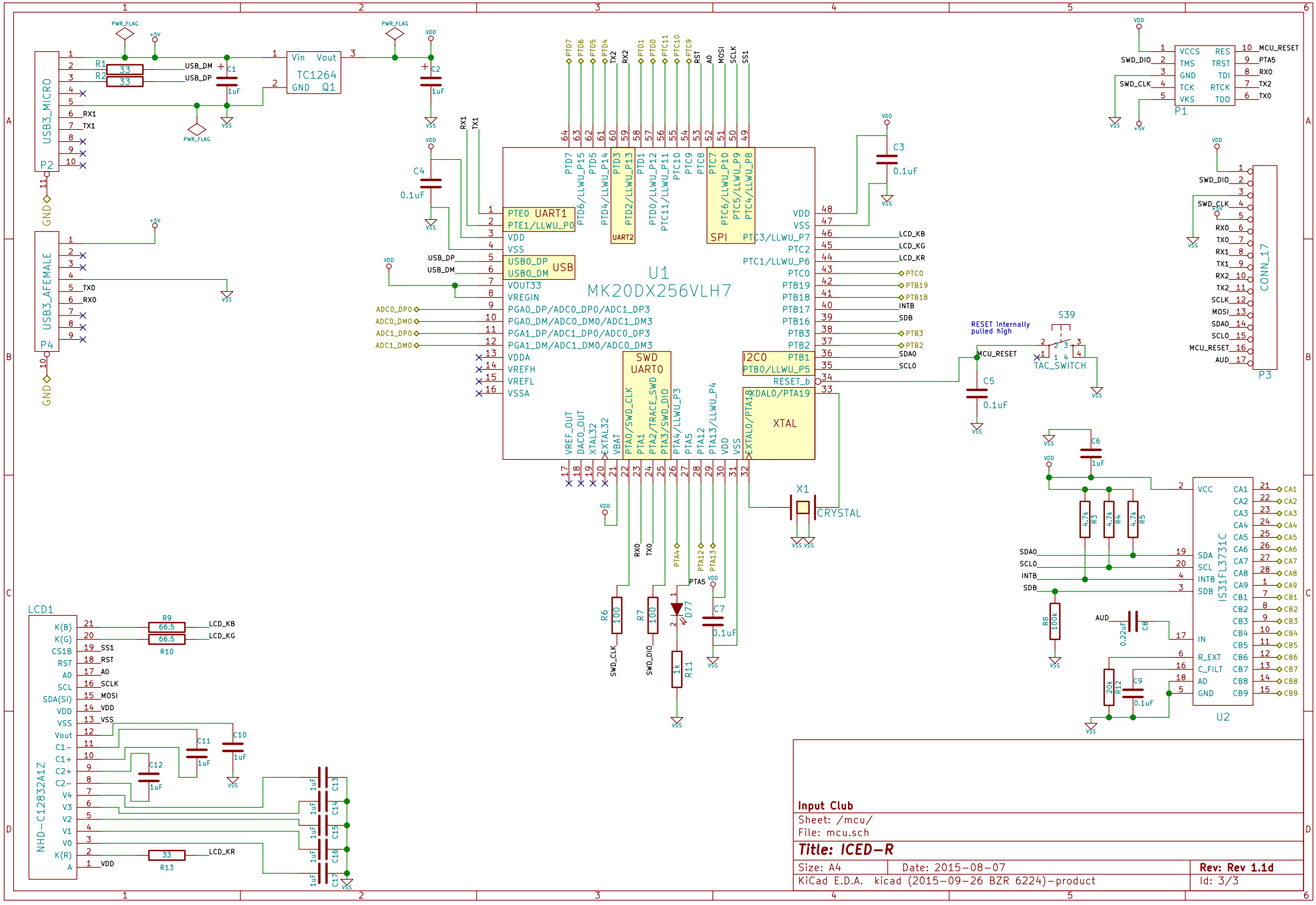
U1
MK20DX256VLH7
USB3_MICRO
P2
USB3_AFEMALE
P4
TC1264
Vin Vout
GND Q1
PTE0 UART1
PTE1/LLWU_P0
USB0_DP
USB0_DM
USB
SWD
UART0
I2C0
XTAL
SPI
UART2
P1
P3
CONN_17
S39
TAC_SWITCH
RESET internally pulled high
X1
CRYSTAL
IS31FL3731C
U2
LCD1
NHD-C12832A1Z
Input Club
Sheet: /mcu/
File: mcu.sch
Title: ICED-R
Size: A4
Date: 2015-08-07
Rev: Rev 1.1d
KiCad E.D.A. kicad (2015-09-26 BZR 6224)-product
Id: 3/3