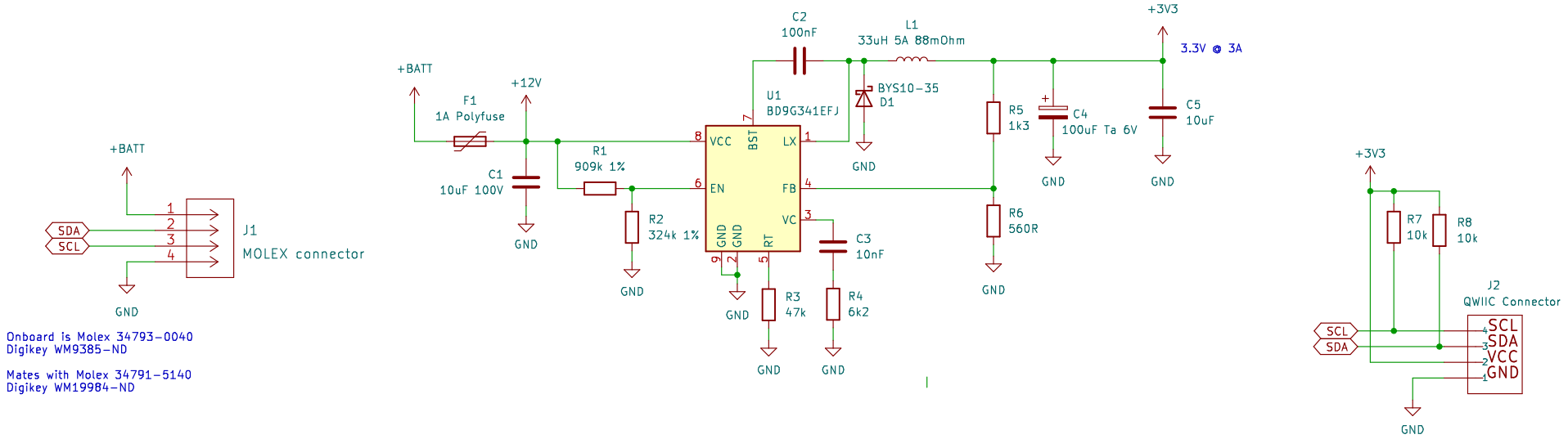

Gavin Hurlbut

Sheet: /

File: qwiic-interface.kicad_sch

Title: QWIIC Interface Board

Size: A4	Date: 2023-02-14	**Rev: 2.0**
KiCad E.D.A. kicad 6.0.11-2627ca5db0~126~ubuntu22.04.1		Id: 1/1