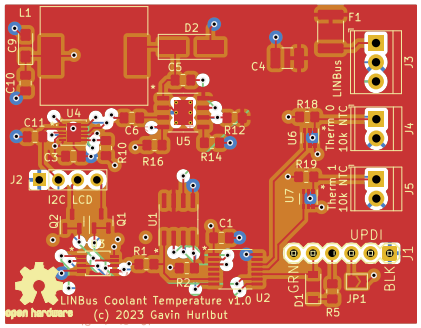

Gavin Hurlbut

Sheet:

File: lin-coolant-temperature.kicad_pcb

Title: LINBus Coolant Temperature

Size: A4	Date: 2023-02-18	**Rev: 1.0**
KiCad E.D.A. kicad 6.0.11-2627ca5db0~126~ubuntu22.04.1		Id: 1/1