Service Manual

8920 405 10601

mini digital
cassette recorder

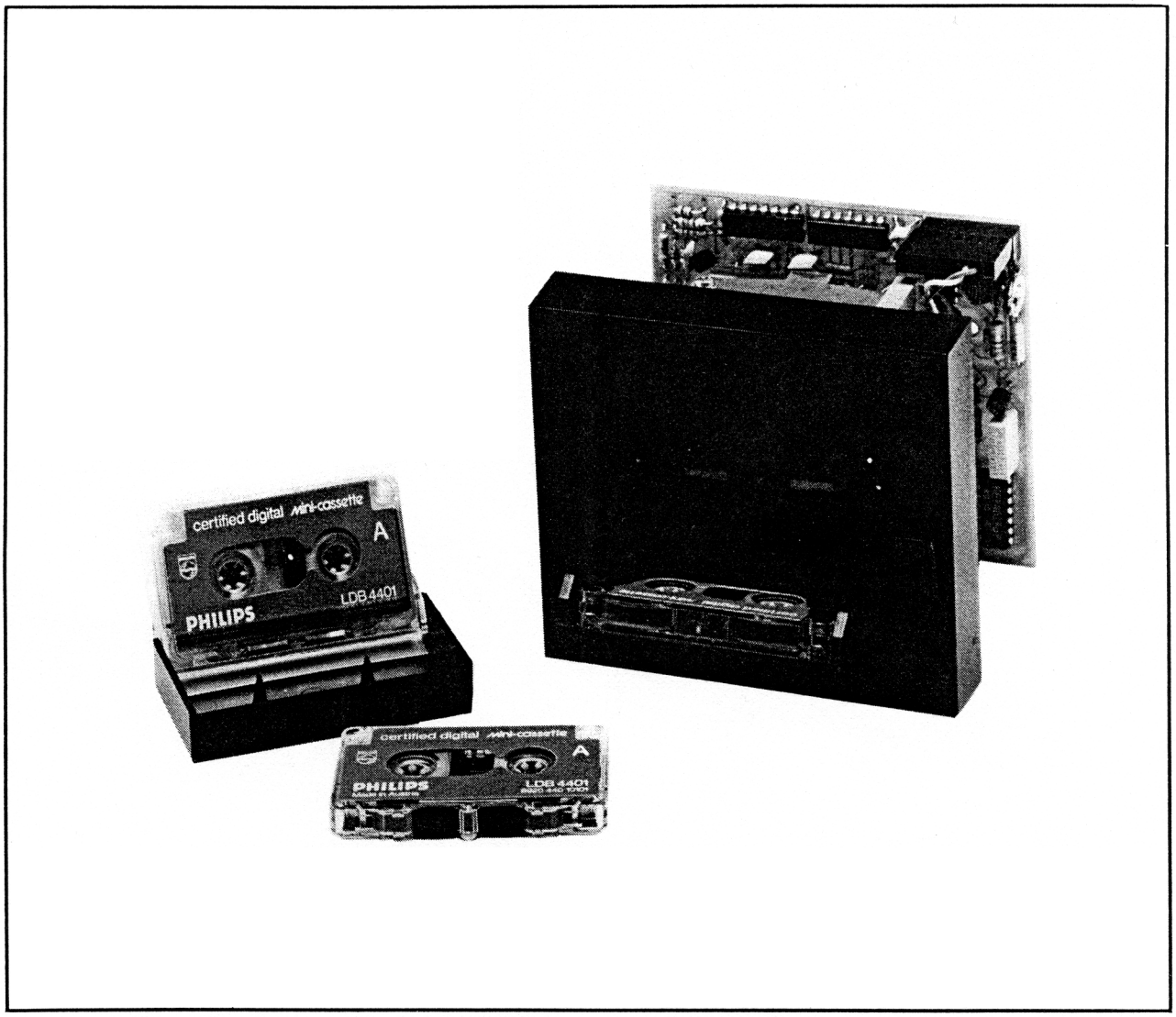

PHILIPS

PHILIPS

This documentation is valid from serial number 3650 onwards e.g. fCO1 included.
Data subjet to change without notice.

Contents

I GENERAL
1. Introduction
2. Technical Specification
3. Type Numbers

II USE OF THE MINI-DCR
1. Interfacing
2. Survey of Interface Signals
3. Timing Diagram
4. Example of an interface Flow chart
5. Operating Instructions
6. Operator Maintenance

III SERVICE INFORMATION
1. Technical Description
2. Maintenance
3. Adjustments

IV SPARE PARTS

LIST OF ILLUSTRATIONS

Fig. 1	Physical Composition of the Mini-Cassette
Fig. 2	Physical Composition of Tape
Fig. 3	Data Block Composition
Fig. 4	$\overline{WDA}$-Signal
Fig. 5	$\overline{RDA}$-RDC Signal
Fig. 6	RDC timing
Fig. 7	Physical Dimensions
Fig. 8	Interface Connector
Fig. 9	Interface Diagram
Fig. 10	Timing Diagram
Fig. 11	Flowchart example
Fig. 12	Block Diagram
Fig. 13	Circuit Diagram
Fig. 14	PCB Layout
Fig. 15	RAS Signal
Fig. 16	Jitter Adjustment
Fig. 17/18	Spare parts

I General

1. INTRODUCTION

This manual provides the description, timing diagram, interfacing signals as well as operating and maintenance instructions for the Philips mini-digital cassette recorder.
The Philips Mini-DCR has been specially designed for O.E.M.'s and users that need a fast and low-cost serial memory device for data storage and interchange.
The Mini-DCR is available as a read-and-write version.
The recorder uses the Philips mini-cassettes.
The whole system is based on Philips' extensive know-how gained in many years experience of digital cassette recording systems and their applications.
Advantages of economy, cassette convenience and high performance have made this technique internationally accepted and Philips quality and reliability have made them a major O.E.M. supplier of this type of equipment.

The Philips Mini-DCR is an ideal unit for micro-processor based systems, terminals, mini-computers and scientific calculators to be used in program loading, memory back-up and data capture applications.

2. TECHNICAL SPECIFICATION

Number of heads	: two; a read/write head and an erase head
Recording head	: single gap, single track, half width, read/write head
Number of tracks	: two; A-side and B-side
Recording method	: phase encoding character/bit serial
Tape length	: approx. 35 m.
Data transfer rate	: 6000 bits per second
Recording density	: 330-560 bpi (13-22 b/mm)
Irrecoverable error rate	: 1 in 10^9 bits
Tape transport	: single motor hub driven 338 rpm ± 5%
Tape speed	: 10.6-18 ips (270-450 mm/sec.)
Read/write time	: <96 sec. for full tape length
Start time read/write	: <100 msec. (after change in direction <150 msec.)
Stop time read/write	: 30-120 msec.
Start distance	: 0.6-2.0 inch (15-50 mm) (after change in direction 1.2-2.6 inch (30-65 mm)

Stop distance	: 0.2-1.0 inch (5-25 mm)
Rewind time	: <96 sec.
Data capacity	: 64k octads per track
Medium	: Philips 3.81 mm mini cassette

Electronics

Read/write electronics, tape transport

Control logic	: one printed circuit board
Signal interface	: the signal interface is a MOS-compatible (HEF 4000p series) interface
Signal levels/ output signals	: logic "1" Vs minus 0.5V logic "0" < 0.5V
Signal levels/input signals	: logic "1" 9V to Vs logic "0" < 3V
Power interface	: DC-power Vs = 12 volt ± 5%
Power load	: 400 mA peak (100 msec.) 120 mA nominal 30 mA stand-by
Thermal dissipation	: 1.4 Watt nominal
Electrical connections	: via Amp. connector. 14 Pins cis serie Amp. code Housing 1-163690-3 Pin 163691-1 (loose piece) 163618 (contact strips)

Environmental conditions

Operating temperature range	: +5°C to +55°C
Thermal shock	: <11°C per hour
Relative humidity	: 10%-90% (no condensation)
Air pressure	: 780-1100 mbar
Vibration (IEC 68-2-6)	: 5-200 Hz at 1g curve
Heat radiation	: direct sunlight radiation on the cassette drive is not allowed
Physical dimensions	: see fig. 7
Weight of Mini-DCR	: about 400 grams

3. TYPE NUMBERS

8920 405 10601	MDCR with front cover and write enable switch (evaluation unit inclusive 6 cassettes)
8920 405 10602	MDCR in normal shipping package containing 20 units without cassettes
8920 440 10101	Mini cassette in plastic cover.

II Use of the Mini-DCR

1. INTERFACING

The plug connections are given in fig. 8 and 9 and the interface signals and their function are listed in the following section.
The timing diagram in fig. 10 gives information about the various interface signals and commands.

- To guard against any fire hazard the following measures should be taken:
  A. insert a fuse 0.5 A in the positive leads of the 12 Volt supply;
  B. the supply leads and earth leads must each have a minimum cross-section of 0.38 mm^2.
- It is recommended that cassettes be entirely (re-)wound before they are removed from the recorder.
  This prevents the tape from being touched by the fingers during loading and unloading.
  Formation of unwanted loops is also avoided.
- If the direction of the tape movement is changed the start time will be about 50 msec. longer.
  The start distance than will be between 30 and 65 mm.
- Each mini-cassette can be equipped with a write-enable plug in order to allow writing on the tape.
  The position of the write-enable plug determines whether writing is enabled on track 1 or 2 (see fig. 1).
- Information written in the Forward direction cannot be recovered by reverse reading due to the variation in recording density and tape speed.
- In order to avoid earth interference the signal ground and the power ground lines should be interconnected at the power supply.
- Figure 2 shows the physical composition of the tape.
  Figure 3 shows the composition of the data blocks.
- Initial gaps, interblock gaps and end of data gaps are all erased to the same polarity.
  This polarity is called the reference polarity.
  For this purpose the $\overline{WDA}$-line should remain high.

A preamble at the beginning of each block is required to synchronise the read electronics.
Data shall be Phase Encode (PE)

data bit value: 0 1

line transitions: 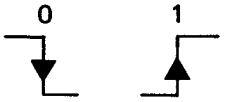

Additional line transitions (phase line transitions) shall be given at the nominal midpoints between bit line transitions if required, to establish the proper polarity for the successing bits.

The preamble is used to synchronise the Read Clock (RDC) Read data is TRUE at the positive pulse edge of the signal Read Clock (RDC).

2. SURVEY OF INTERFACE SIGNALS

Control lines		Description	If "0"	If "1"
$\overline{FWD}$	Forward	Causes tape transport in forward direction.	Initiates tape transport.	Stops tape transport.
$\overline{REV}$	Reverse	Causes tape transport in the reverse direction.	Initiates tape transport.	Stops tape transport.
$\overline{WCD}$	Write Command	Enables information entering via WDA-line. Also causes erasure of the tape.	Gate is open.	Gate is closed.
Status lines				
$\overline{BET}$	Begin/end of tape	Indicates whether begin of tape or end of tape has been detected.	Begin or end of tape has been detected.	
$\overline{CIP}$	Cassette in position	Indicates that a cassette is in position and the door has been closed.	Cassette is present.	No cassette.
$\overline{WEN}$	Write enable	Indicates if a write enable plug is present in the cassette (file protection).	Allows writing on tape (plug is present).	Write action prohibited.
Data lines				
$\overline{WDA}$	Write data	Input channel of the write amplifier accepting information in digital form to be recorded on tape.	PE-encoded data "0" is a neg. going signal. Data "1" is a positive going signal. In the gap $\overline{WDA}$ is at high level.	
RDC	Read clock	Separately generated clock to strobe read-data free of jitter.	Positive going edge should be used to clock read-data.	
$\overline{RDA}$	Read data	Output channel of the read amplifier, supplies digital data that has been read from the tape.	PE encoded data "0" is negative going signal. Data "1" is a positive going signal. In the gap $\overline{RDA}$ is at high level.	

3. TIMING DIAGRAM

See fig. 10

T1: The length depends on selected block-length and the relative position on the tape.
T2-T3-T4-T5: Depend on selected block-length, the total number of blocks and the start/stop, distances/times.
T6-T7: The pulses on the $\overline{FWD}$ line are necessary for clearing the Read Electronics.

How to use tape capacity efficiently

1. Required tape capacity: 32k-bytes per track (128 blocks of 256 bytes each).
   T2 = 1/3 T1; T3 = 40 msec.;
   T4 = 250 msec.; T5 = 0. In case of re-write one block T4 = 350 msec.
2. Required tape capacity; 24k-bytes per track (96 blocks of 256 bytes each).
   T2 = 198 msec.; T3 = 40 msec.;
   T4 = 450 msec.; T5 = 0.

3. Required tape capacity; 40k-bytes per track (40 blocs of 1024 bytes each).
   T2 = 198 msec.; T3 = 40 msec.;
   T4 = 450 msec.; T5 = 0.
4. Required tape capacity; 64k-bytes per track (1 block of 64k-bytes).
   T2 = Rewind time till BOT; T3 = time to write end of data gap; T4 is not applicable.

Remarks

- During a continuous write operation (no backspace or controll-read) T3 = 0 msec. in order to obtain optimum data capacity.
- Repeated updating of a data-block positioned between two other blocks, may cause over-writing of the first part of the next data block.
- The pre-amble is used to synchronise the Read-clock (see detail A of the timing diagram).
- Read data is TRUE at the positive pulse edge of the signal Read clock.
- To read two or more blocks of data continuously it is necessary to reset Read clock in the inter-block gaps. This can be achieved by a pulse on the $\overline{FWD}$-line of:
  $1\ \mu s < T < 0.5$ msec.
- During Read operation signal $\overline{WDA}$ may not change level, because this causes cross-talk on RDA.
- Signal BET indicates both begin and end of tape.
- In case of rewriting blocks, T4 should be at least 100 msec. longer as indicated.
- If the write enable switch is installed only cassette filled with the write enable plug can be recorded.
- The status signals $\overline{CIP}$ $\overline{WEN}$ $\overline{BET}$ can have some bounds on leading edges.

4. EXAMPLE OF AN INTERFACE FLOW CHART

In fig. 11 an example of a flow chart is given. The flow chart illustrates a program for writing and checking 128 blocks of 256 databytes each.

5. OPERATING INSTRUCTIONS

Since the Mini-DCR is intended for use by O.E.M. customers, operation of the device will depend upon individual system requirements.

Cassette loading is accomplished by sliding up the button adjacent to the cassette cover and inserting the mini-cassette, open end first, into the cassette cover and closing the cover.

6. OPERATORS MAINTENANCE

The only maintenance required for the user is cleaning of the read/write head every working week or 100 hours.
Use cotton wool buds moistened with ethanol.

III Service Information

1. TECHNICAL DESCRIPTION
(see fig. 12 block diagram and fig. 13 circuit diagram)

Write Data
The phase encoded (PE) $\overline{WDA}$-signal is input at 15 IC1 and appears in-phase at 11 IC1 and anti-phase at 9 IC1.
These two signals are applied across the read/write head when the $\overline{WCD}$ signal 9 IC6 is LOW and the WEN switch closed (8, 9 IC9-high).
Enabling IC1 (4 IC1-low) also causes a low level; from 2 IC1, to be fed via R56 to the base of TS6 causing current to flow through the erase head.

Read Data
The read signal from the read/write head is amplified via 2, 1 IC2 and applied to the pulse-shaper and rectifier circuit. The negative pulses inverted and amplified via 6, 7 IC2 and recombined with the amplified positive pulses from 8 IC2. Further shaping and squaring is carried out via TS7 and IC6.
The square-wave read data signal is level-coded via 3, 1 IC7 and appears at output pin 12 ($\overline{RDA}$).
The read clock signal is derived from the read data signal via 2, 3 IC3 and appears at output pin 11 (RDC) to indicative a valid $\overline{RDA}$ output when positive.
The RDC signal is the strobe pulse for the $\overline{RDA}$ signal. The one shot-time of IC3 depends on the bit time of the $\overline{RDA}$ signal, to strobe this signal always at the right time. The phase bit is then ignored.
The Flip Flop 11 12 IC7 is introduced to start at the beginning of the data always with the shortest one shot time. The preamble will then synchronise the RDC circuit.

Motor Control Logic
A low signal on either the $\overline{FWD}$ or $\overline{REV}$ inputs will cause switch "on" of TS2, TS5 or TS3, TS4 respectively.
The amount of current flowing through these transistors (and the motor) is controlled by TS1. TS1 is driven by the servo loop formed by the motor, the tacho generator and IC's 4, 5 and 6.

BET and Tape Stopped Detector
A sample of the positive output from 8 IC5 is fed to 3 IC5 to hold the BET line high; should the tape jam or the motor stop, the output 8 IC5 goes negative causing a low on the $\overline{BET}$ line.

Clear Logic
When both $\overline{REV}$ and $\overline{FWD}$ lines are high the CLEAR signal output at 11 IC9 goes high causing the following:
i) $\overline{BET}$ line high via 2 IC5.
ii) TS1 cut-off via 12 IC5.
iii) Preset of the RDA and RDC flip-flops IC7.

2. MAINTENANCE

The only maintenance required for the Mini-DCR is cleaning of the read/write head every week or 100 working hours. Use cotton wool buds moistened with ethanol.

Note 1
The heads are adjusted in the factory and locked. Do not try to readjust them.

Note 2
The position of the motor bracket on the chassis is a factory adjustment. Do not loosen the mounting screws.

3. ADJUSTEMENTS

3.1 Electronics

a. The motor speed has to be adjusted with R4:
   - Use the middle part of the total tape length.
   - Connect a frequency counter to testpoint 11.
   - Adjust with R4 to a frequency of 1075 ± 10 Hz.

b. The amplitude of the RAS-signal has to be adjusted with R29:
   - Use a reference amplitude cassette (code nr. 5322 297 34017).
   - Write a digital signal with a frequency of 3 KHz.
   - Rewind the recorded part of the tape and measure during the first forward read-cycle the voltage on the RAS-test-point with an oscilloscope.
   - Adjust R29 to the voltage as mentioned on the reference amplitude cassette.

3.2 Mechanical

The mechanical forward/reverse switching element has two stop screws that should be adjusted individually to give minimum jitter in each direction (see fig. 16):

- Use a continuous pre recorded cassette (i.e. 3 KHz. test cassette, code nr. 5322 297 34016).

- Use the special srewdriver* that can be supplied under service code number 5322 395 54082.
- If the screw has not been turned in far enough a louder gear wheel noice is audible. (An oscilloscope connected to the RAS test-point shows that the amplitude of the signal is less stable (see fig. 15b).)
- Turn the screw clockwise until the stronger gear wheel noise just disappears, and then give the screw a further half-turn.
  (The oscilloscope shows a stable output voltage (see fig. 15a).)
- If the screw is turned in too far, the application of the gears is insufficient, and again a louder gear whell noise is audible.
  (The jitter is again visible on the oscilloscope in the envelope of the tape output.)

---

* If a normal screwdriver is used, there is a great risk of it slipping out of the grove into the gears which could then be damaged. In this case the motor assembly has to be replaced.

IV Spare parts
Ersatzteile
Pièces de rechance

Item Position Rep.	Description	Ordering Code Bestell kode No. de code	Beschreibung	Désignation
20	Stud	5322 466 94584	Stehbolzen	Tige filetée
40	Contactpin (100 pcs)	5322 268 14103	Kontaktstift (100 Stk.)	Broche de contact (100 pcs.)
110	pcb connector (20 contacts)	5322 265 54006	Platinenstecker (20 Kontakte)	Connecteur imprimé (20 contacts)
120	Keying plug	5322 401 14191	Tastenstecker	Fiche
1270	CIP switch assy	5322 278 94079	CIP-Schalter-Zus.	Ensemble commutateur CIP
FC01	CIP switch assy	5322 278 94088	CIP-Schalter-Zus.	Ensemble commutateur CIP
1380	WEN switch assy	5322 278 94081	WEN-Schalter-Zus.	Ensemble commutateur WEN
1420	Front (without knob)	5322 443 34019	Frontplatte (ohne Knöpfe)	Face avant (sans bouton)
1430	Knob	5322 414 64109	Knopf	Bouton
1440	Washer for Knob	5322 466 94583	Unterlegscheibe für Knopf	Rondelle pour bouton
2040	Head housing assy	5322 249 14079	Kopfgehäuse-Zus.	Ensemble de logement de têts
2050	Contact housing (20 contacts)	5322 267 64007	Kontaktgehäuse (20 Kontakte)	Boîtier de contact (20 contacts)
2060	Spring (lock slide)	5322 492 34492	Feder (Verriegelungsschieber)	Ressort (verrou)
2070	Spring (head housing)	5322 492 34493	Feder (Kopfgehäuse)	Ressort (logement de tête)
2080	Guide block	5322 520 14257	Führungsblock	Bloc-guide
2090	Pressure bracket	5322 405 34065	Druckbügel	Etrier de compression
2100	Brake (without Felt)	5322 405 24107	Bremse (ohne Filz)	Frein (sans feutre)
2110	Spring (pressbracket)	5322 492 34595	Feder (Druckbügel)	Ressort (étrier de compression)
FC01	Spring (pressbracket)	5322 492 34604	Feder (Druckbügel)	Ressort (étrier de compression)
2120	Spring (brake)	5322 492 34596	Feder (Bremse)	Ressort (frein)
2130	Motor assy	5322 361 24177	Motor-Zus.	Ensemble de moteur
2140	PCB assy	5322 214 34258	Platinen-Zus.	Ensemble de platine imprimée
FC01	PCB assy	5322 214 34267	Platinen-Zus.	Ensemble de platine imprimée
2150	Brake felt	5322 466 94585	Bremsfilz	Feutre de frein
2160	Lock slide	5322 466 85795	Verriegelungsschieber	Verrou
	Write Enable plug	5322 462 44357	Schreibfreigabestopfen	Fiche d'autorisation decriture
R1	C 47k.	4822 110 63152		
R2	C 100k.	4822 110 63161		
R3	C 10k.	4822 110 63134		
R4	P 100k.	5322 100 10116		
R5	M 301k.	5322 116 54743		
R6	C 680E	4822 110 53103		
R7	M 46k4	5322 116 50557		
R8	M 4k64	5322 116 50484		
R9	M 10k.	5322 116 54619		
R10	M 46k4	5322 116 50557		

Item Position Rep.	Description	Ordering Code Bestell kode No. de code
R11	M 4k64	5322 116 50484
R12	C 120k.	4822 110 63163
R13	C 330k.	4822 110 63174
R14	C 1M	4822 110 63187
R15	C 820k.	4822 110 63185
R16	C 560E	4822 110 63101
R17	C 270E	4822 110 63092
R18	C 100k.	4822 110 63161
R19	C 100k.	4822 110 63161
R20	C 100k.	4822 110 63161
R21	C 47k.	4822 110 63152
R22	M 4k22	5322 116 50729
R23	M 16k2	5322 116 50593
R24	C 100k.	4822 110 63161
R25	C 100k.	4822 110 63161
R26	C 47k.	4822 110 63152
R27	C 47k.	4822 110 63152
R28	C 2M2	5322 111 44128
R29	P 1k.	5322 100 10115
R30	C 680E	4822 110 53103
R31	C 1k5	4822 110 63112
R32	M 10k.	5322 116 54619
R33	M 10k.	5322 116 54619
R34	M 187k.	5322 116 54723
R35	M 215k.	5322 151 52154
R36	C 4k7	4822 110 63125
R37	C 22k.	4822 110 63143
R38	C 2k7	4822 110 63118
R39	C 47k.	4822 110 63152
R40	C 2k2	4822 110 63116
R41	C 2k2	4822 110 63116
R42	C 2k2	4822 110 63116
R43	C 2k2	4822 110 63116
R44	C 10k.	4822 110 63134
R45	C 10k.	4822 110 63134
R46	C 100E	4822 110 63081
R47	C 10k.	4822 110 63134
R48	M 287k.	5322 116 54741
R49	C 22k.	4822 110 63143
R50	C 1k8	4822 110 63114
R51	M 34k8	5322 116 54661
R52	M 10k.	5322 116 54619
R53	M 42k2	5322 116 50474
R54	M 3k01	5322 116 50524
R55	C 100E	4822 110 63081
R56	C 10k.	4822 110 63134
R57	C 10k.	4822 110 63134
R58	M 390E	5322 116 54401
R59	C 100E	4822 110 63081
R60	C 47k.	4822 110 63152
R61	C 2k2	4822 110 63116
R62	M 150k.	5322 116 54712
C1	470p	4822 122 31177
C2	2N2	4822 121 50415
C3	10N	5322 122 34041
C4	100p	4822 122 31081
C5	68N	5322 121 44137
C6	10N	5322 122 34041
C7	1M	5322 124 14075

Item Position Rep.	Description	Ordering Code Bestell kode No. de code
C8	100N	4822 121 40334
C9	47M	4822 124 20477
C10	22N	4822 122 30103
C11	10M	4822 124 20697
C12	10N	5322 122 34041
C13	10M	4822 124 20697
C14	3N9	4822 122 30098
C15	470p	4822 122 31177
C16	560p	4822 122 30126
C17	22N	4822 122 30103
C18	680p	4822 122 31178
C19	100N	5322 121 40323
C20	1n8	4822 122 31164
L1	Coil	4822 158 10224
L2	Coil	4822 158 10224
D1-D2	BAW62	4822 130 30613
D3	BZX79-C6V2	4822 130 34167
D4-D10	BAW62	4822 130 30613
D11	BZX79-C9V1	4822 130 30862
D12-D16	BAW62	4822 130 30613
TS1	BD204	5322 130 44334
TS2	BC327	4822 130 40854
TS3	BC337	4822 130 40855
TS4	BC327	4822 130 40854
TS5	BC337	4822 130 40855
TS6	BC558	4822 130 40941
TS7	BC547C	4822 130 44503
IC1	HEF4502 BP	5322 209 14548
IC2	LM324 N	5322 209 85899
IC3	NE555 V	5322 209 85824
IC4	NE555 V	5322 209 85824
IC5	LM324 N	5322 209 85899
IC6	HEF40106 BP	5322 209 14549
IC7	HEF4013 P	5322 209 10002
IC8	HEF4050 P	5322 209 14068
IC9	HEF4011 P	5322 209 14046

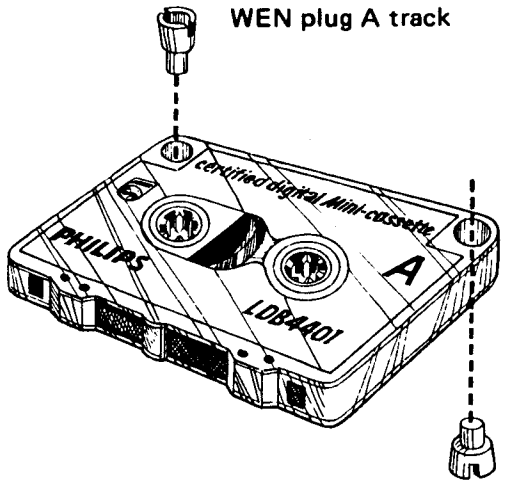

Fig. 1

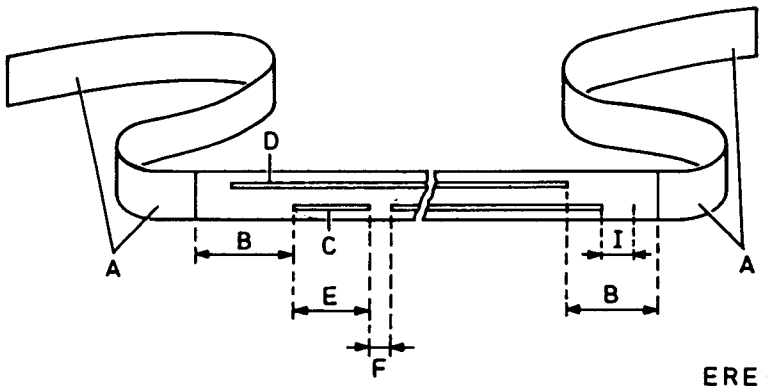

A — Tape leader
B — Initial gap
C — Track 1
D — Track 2
E — Data block
F — Interblock gap
I — End of data gap

Fig. 2

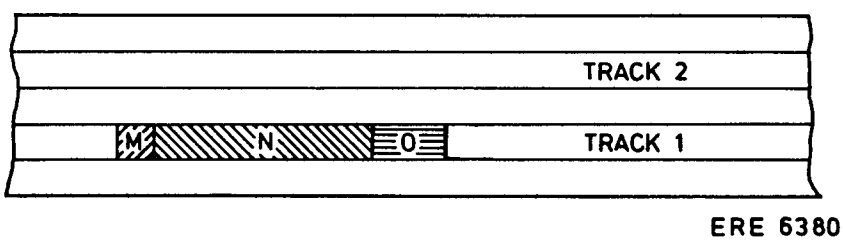

M — Preamble = 10101010
N — data undefined block length least significant bit is read and written first
O — CRC character 16 bits

Fig. 3

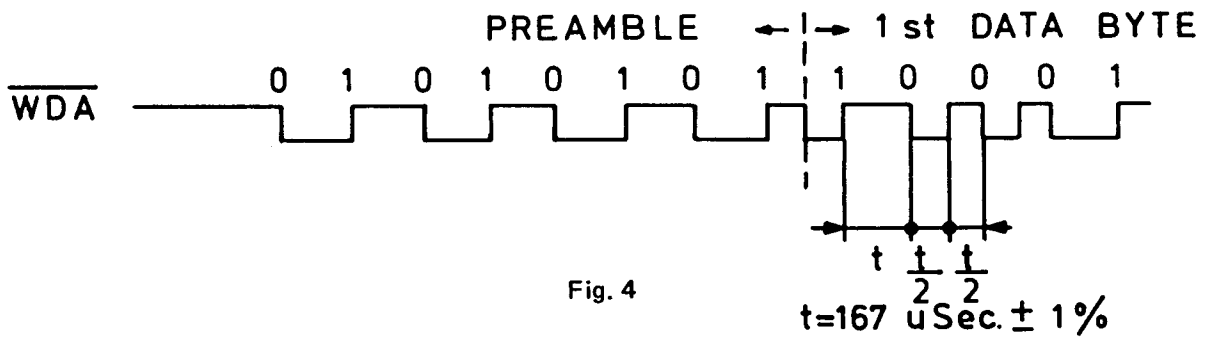

Fig. 4

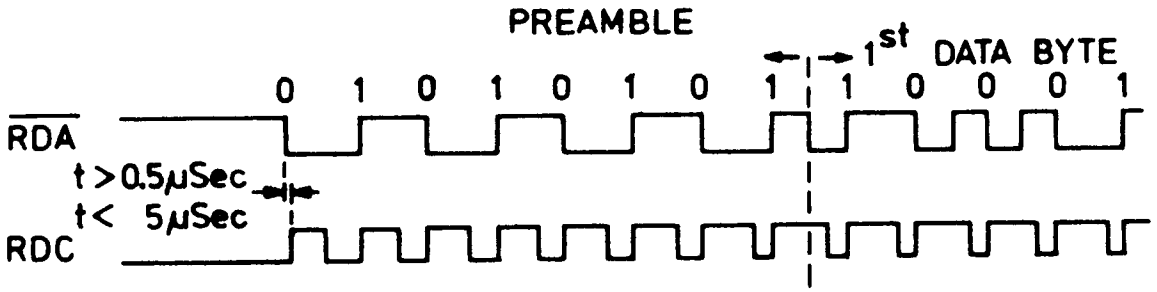

Fig. 5

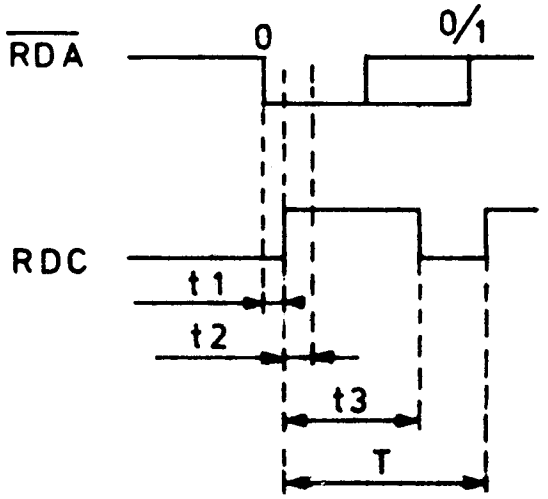

T = ACTUAL BIT_CEL TIME
t1 = > 0,5 µ Sec. < 5 µ Sec.
t2 = 40 µ Sec. = DATA VALID. TIME
t3 = NOMINAL 0,75 T
MINIMUM 0,55T
MAXIMUM 0,95T

ERE 6416

Fig. 6

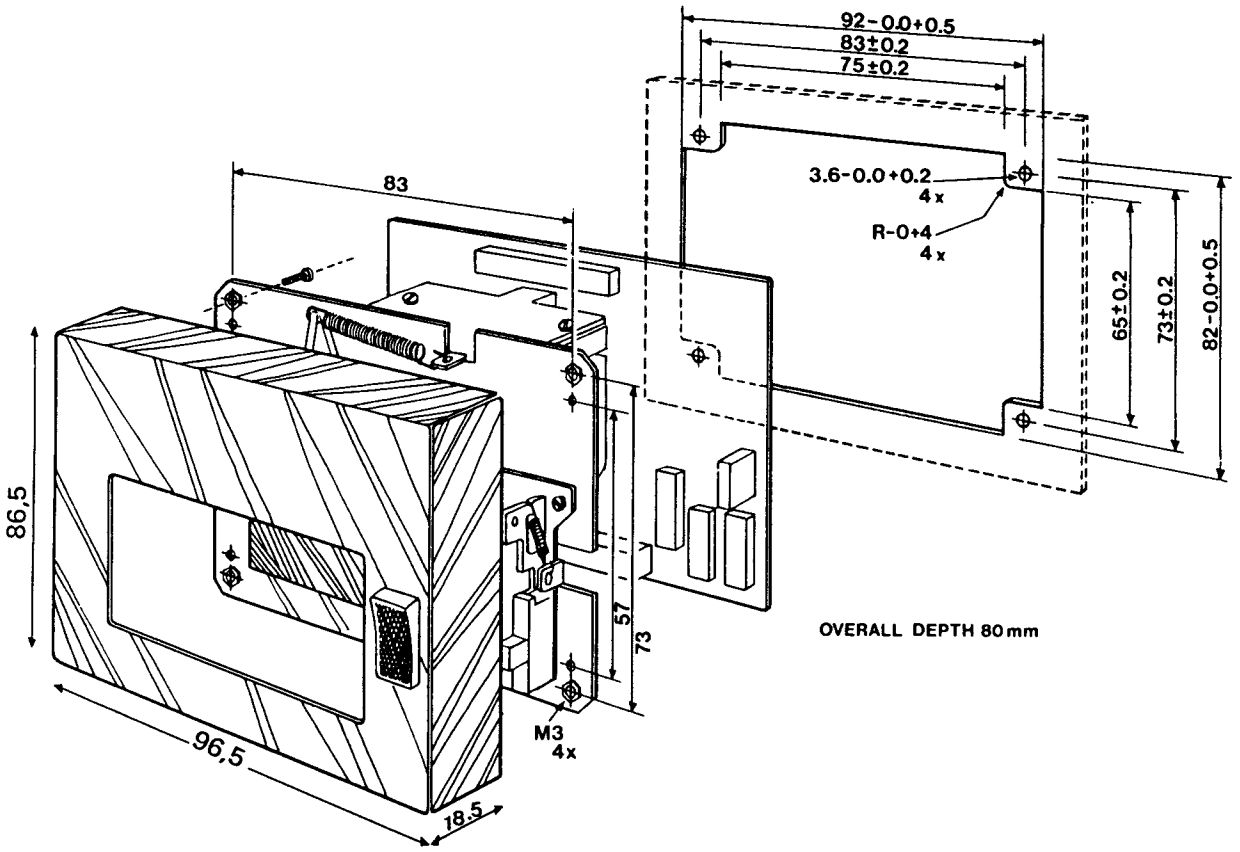

Fig. 7

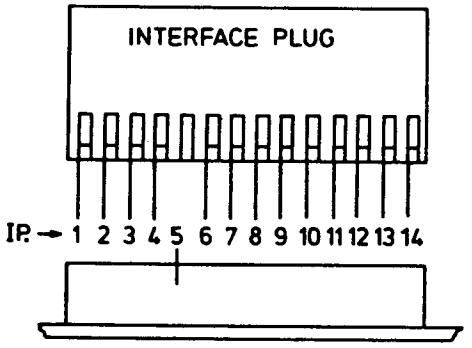

— AMP male connector
housing code: 1 - 163690 - 3

— 13 contacts code 163691 - 1

ERE 6378

Pin No.	Signal	Pin No.	Signal
1	12V	8	$\overline{\text{WCD}}$
2	OV (Signal Ground)	9	$\overline{\text{REV}}$
3	OV (Power)	10	$\overline{\text{FWD}}$
4	Earth (Protective Ground)	11	RDC
6	$\overline{\text{WDA}}$	12	$\overline{\text{RDA}}$
7	$\overline{\text{BET}}$	13	$\overline{\text{CIP}}$
		14	$\overline{\text{WEN}}$

Fig. 8

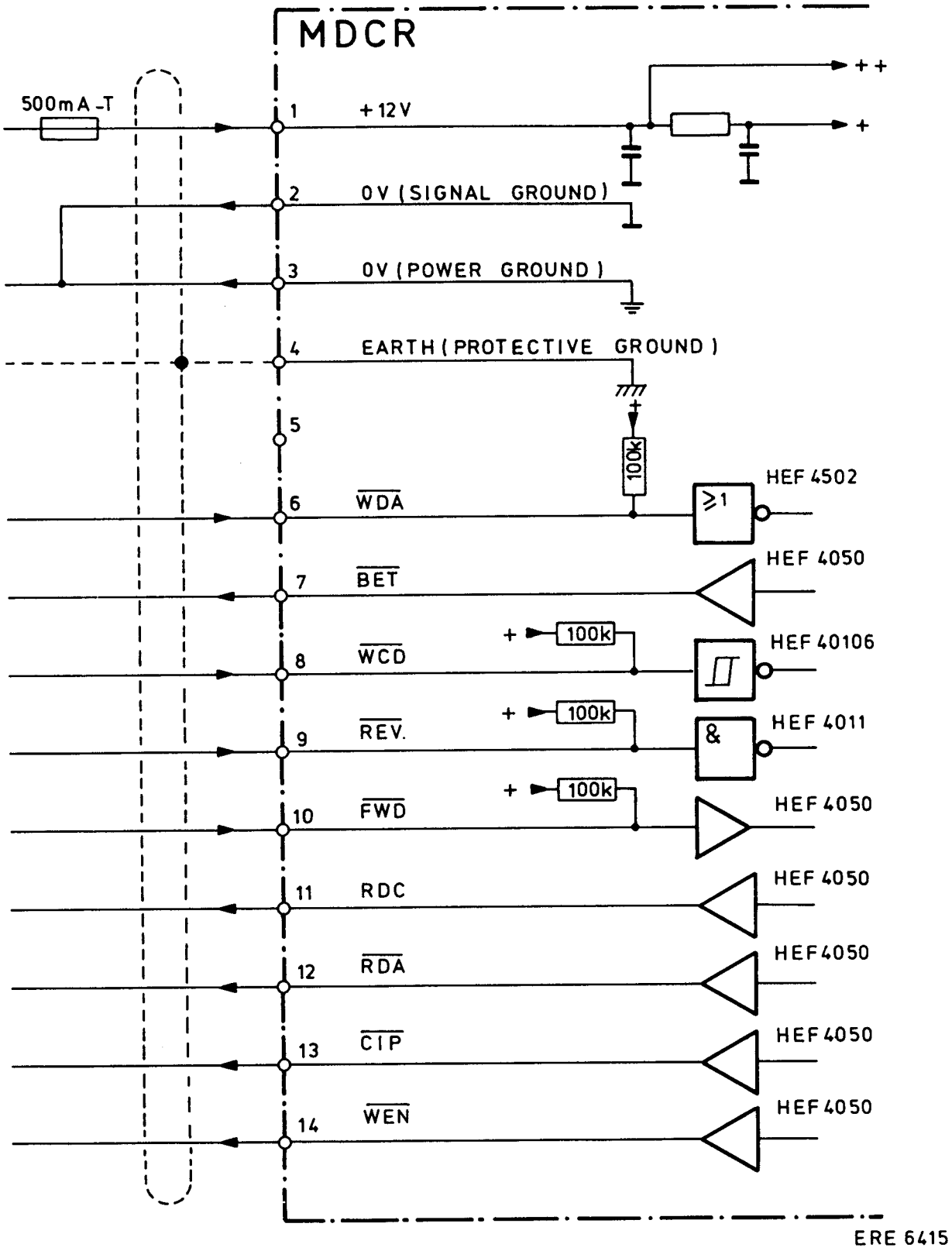
MDCR
500mA-T
1
+12V
++
+
2
0V (SIGNAL GROUND)
3
0V (POWER GROUND)
4
EARTH (PROTECTIVE GROUND)
5
100k
6
WDA
HEF 4502
≥1
7
BET
HEF 4050
8
WCD
100k
HEF 40106
9
REV.
100k
HEF 4011
&
10
FWD
100k
HEF 4050
11
RDC
HEF 4050
12
RDA
HEF 4050
13
CIP
HEF 4050
14
WEN
HEF 4050
ERE 6415

Fig. 9

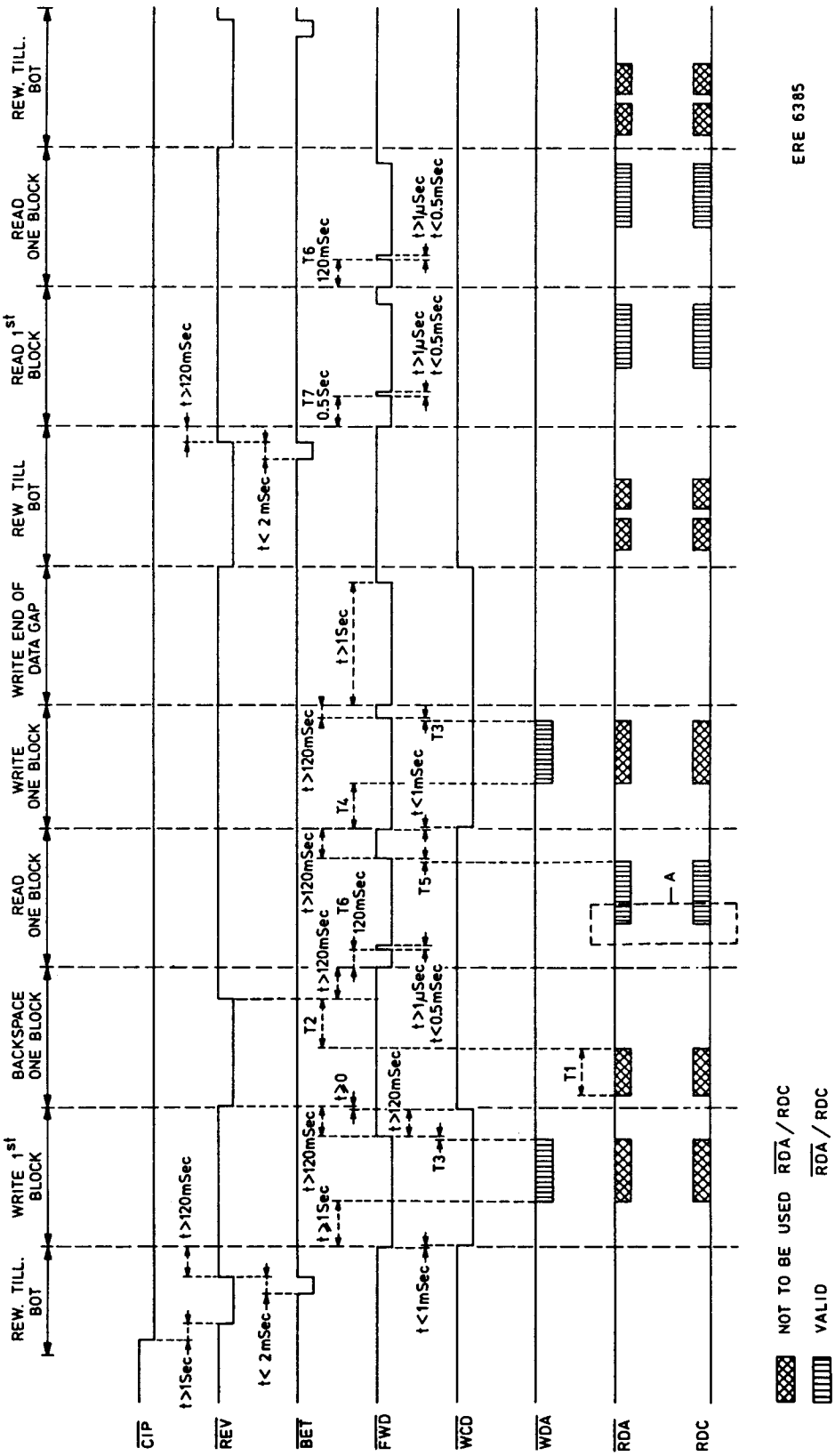
REW. TILL. BOT
WRITE 1st BLOCK
BACKSPACE ONE BLOCK
READ ONE BLOCK
WRITE ONE BLOCK
WRITE END OF DATA GAP
REW TILL BOT
READ 1st BLOCK
READ ONE BLOCK
REW. TILL. BOT
ERE 6385
CIP
REV
BET
FWD
WCD
WDA
RDA
RDC
t>1Sec
t>120mSec
t< 2mSec
t>120mSec
t≥1Sec
t≥0
t>120mSec
t<1mSec
T1
T2
T3
T4
T5
T6
T7
0.5Sec
120mSec
t>1µSec
t<0.5mSec
t>1Sec
t<1mSec
A
NOT TO BE USED RDA / RDC
VALID RDA / RDC

Fig. 10

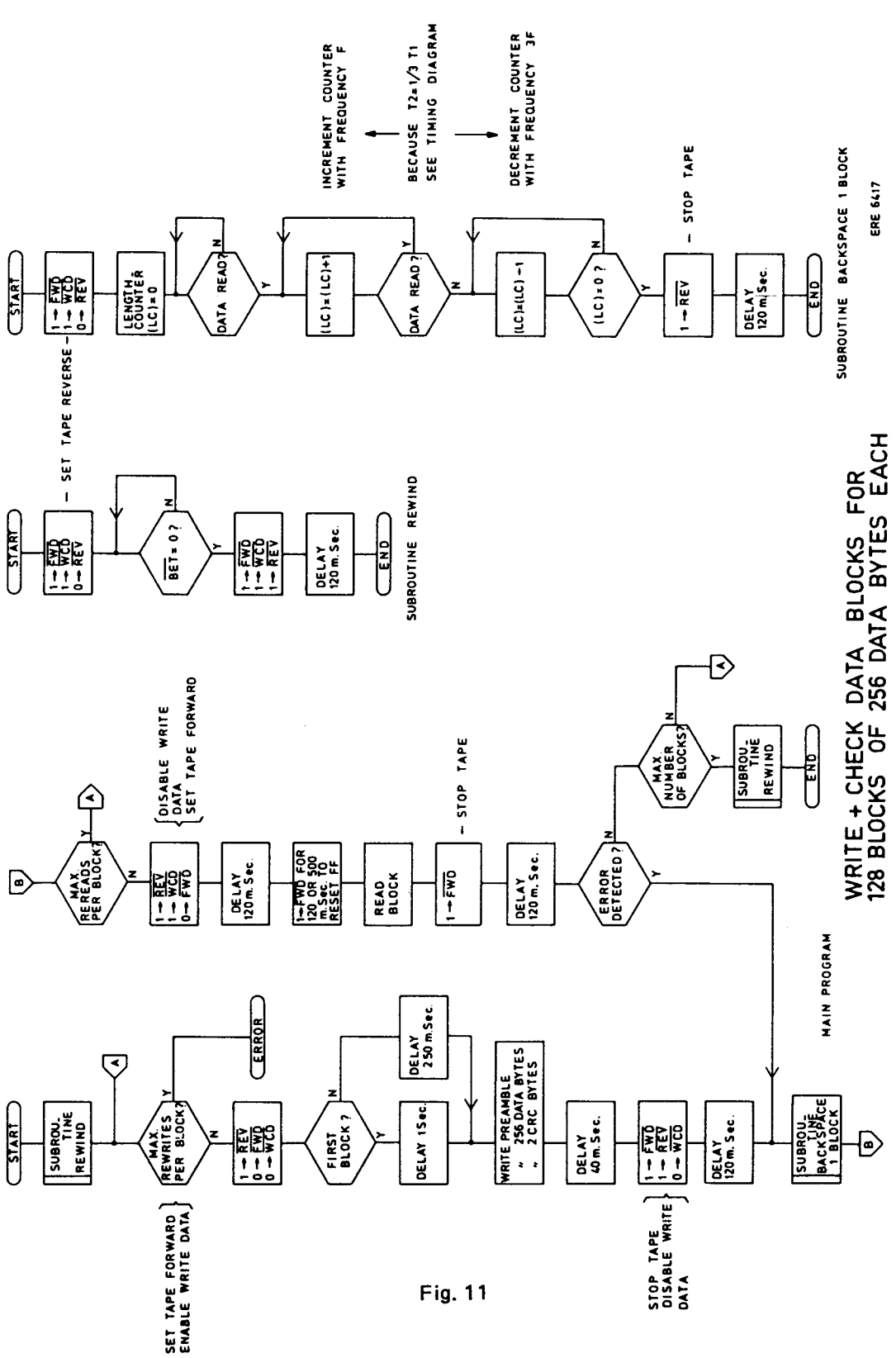
WRITE + CHECK DATA BLOCKS FOR
128 BLOCKS OF 256 DATA BYTES EACH
MAIN PROGRAM
START
SUBROU-TINE REWIND
MAX. REWRITES PER BLOCK?
ERROR
1→REV 0→FWD 0→WCD
FIRST BLOCK ?
DELAY 250 m.Sec.
DELAY 1 Sec.
WRITE PREAMBLE
" 256 DATA BYTES
" 2 CRC BYTES
DELAY 40 m.Sec.
1→FWD 1→REV 0→WCD
DELAY 120 m.Sec.
SUBROU-TINE BACKSPACE 1 BLOCK
SET TAPE FORWARD ENABLE WRITE DATA
STOP TAPE DISABLE WRITE DATA
MAX. REREADS PER BLOCK?
1→REV 1→WCD 0→FWD
DISABLE WRITE DATA
SET TAPE FORWARD
DELAY 120 m.Sec.
1→FWD FOR 120 OR 500 m.Sec. TO RESET FF
READ BLOCK
1→FWD
- STOP TAPE
DELAY 120 m.Sec.
ERROR DETECTED?
MAX NUMBER OF BLOCKS?
SUBROU-TINE REWIND
END
SUBROUTINE REWIND
START
1→FWD 1→WCD 0→REV
- SET TAPE REVERSE
BET = 0 ?
1→FWD 1→WCD 1→REV
DELAY 120 m.Sec.
END
START
1→FWD 1→WCD 0→REV
LENGTH COUNTER (LC)=0
DATA READ?
(LC)=(LC)+1
INCREMENT COUNTER WITH FREQUENCY F
BECAUSE T2≥1/3 T1 SEE TIMING DIAGRAM
DATA READ?
(LC)=(LC)-1
DECREMENT COUNTER WITH FREQUENCY 3F
(LC)=0 ?
1→REV
- STOP TAPE
DELAY 120 m.Sec.
END
SUBROUTINE BACKSPACE 1 BLOCK
ERE 6417

Fig. 11

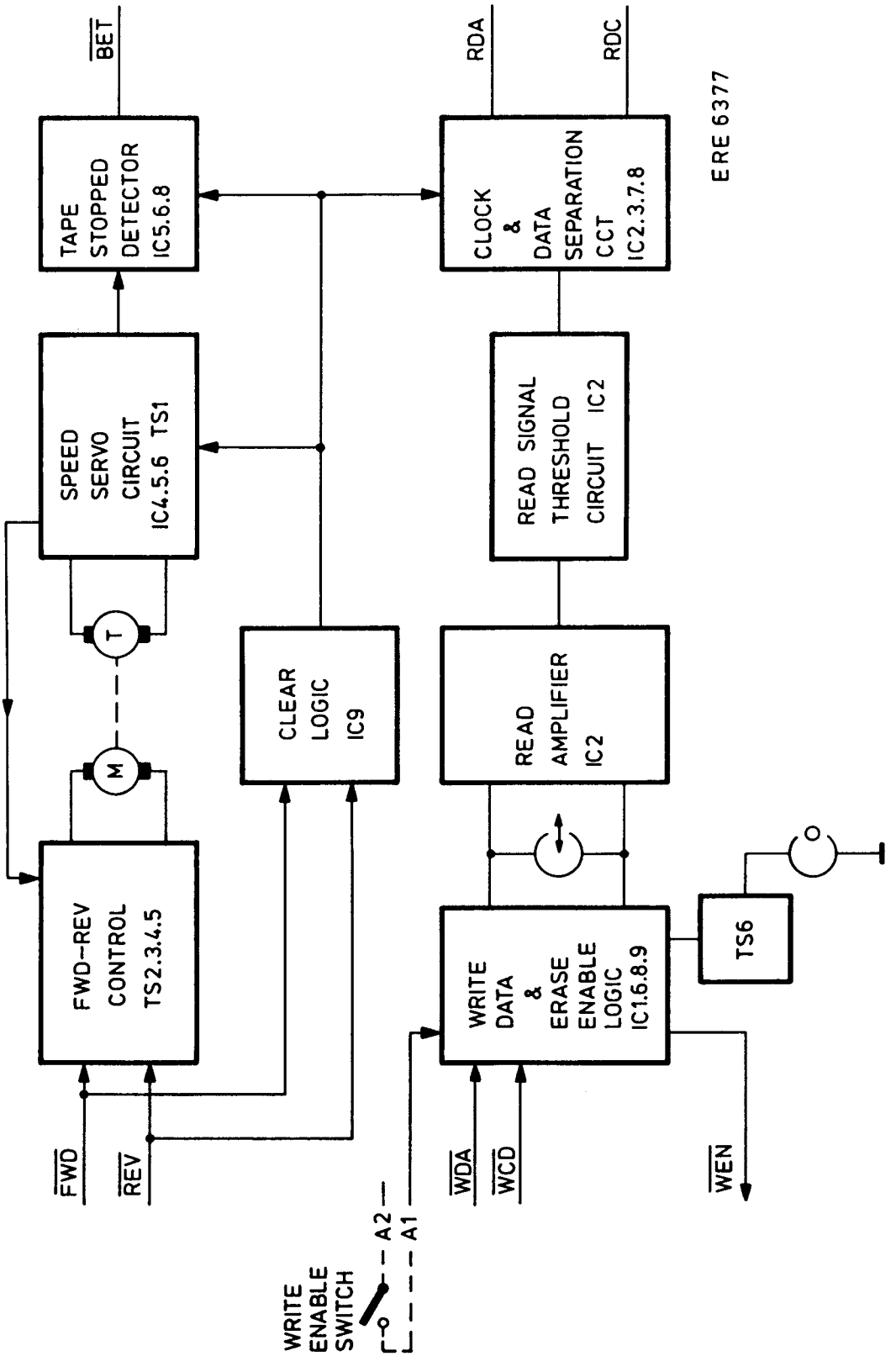
BET
RDA
RDC
ERE 6377
TAPE STOPPED DETECTOR IC5.6.8
CLOCK & DATA SEPARATION CCT IC2.3.7.8
SPEED SERVO CIRCUIT IC4.5.6 TS1
READ SIGNAL THRESHOLD CIRCUIT IC2
T
M
CLEAR LOGIC IC9
READ AMPLIFIER IC2
FWD–REV CONTROL TS2.3.4.5
WRITE DATA & ERASE ENABLE LOGIC IC1.6.8.9
TS6
FWD
REV
WDA
WCD
WEN
WRITE ENABLE SWITCH
A2
A1

Fig. 12

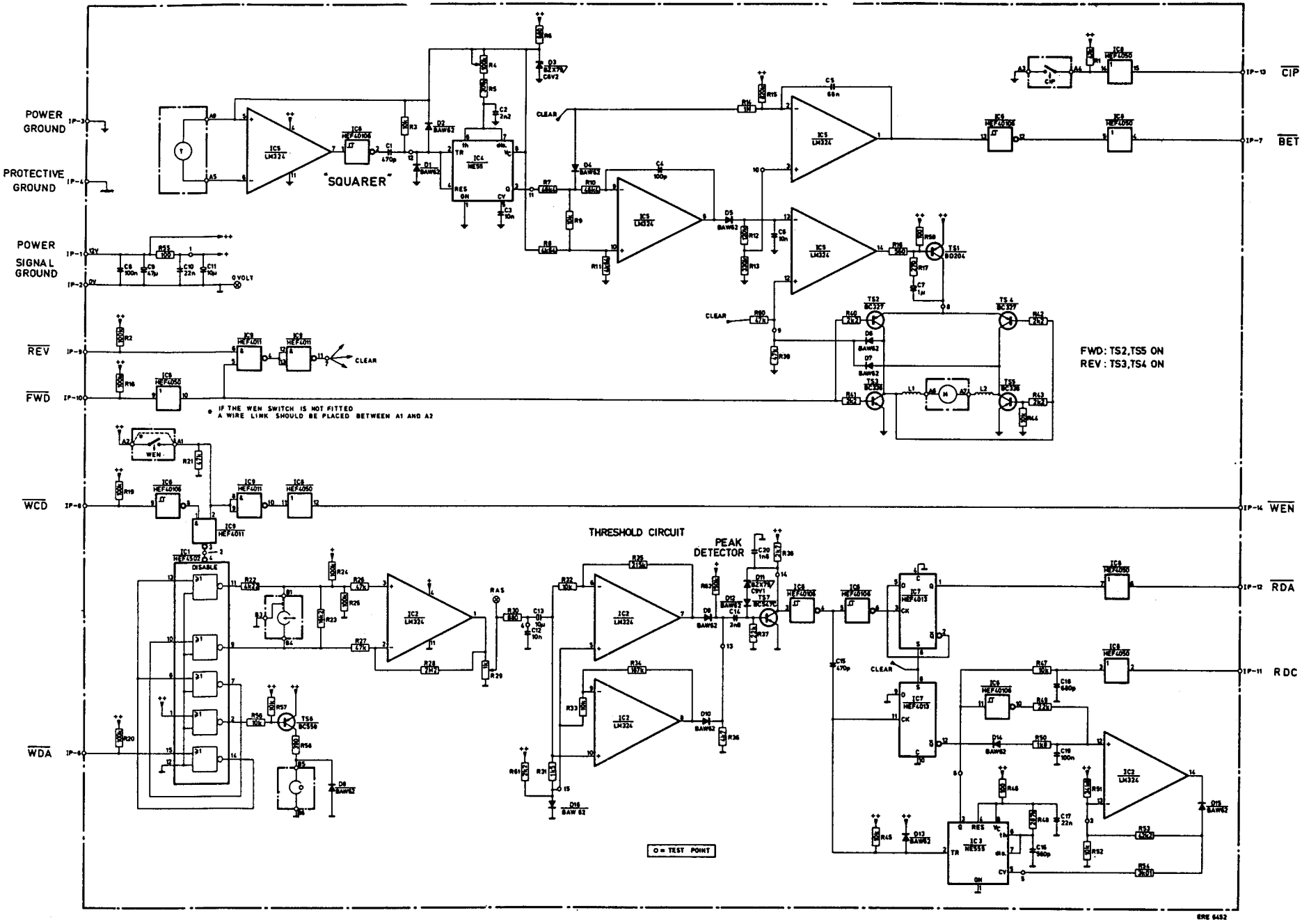
POWER GROUND
PROTECTIVE GROUND
POWER SIGNAL GROUND
REV
FWD
WCD
WDA
CIP
BET
WEN
RDA
RDC
"SQUARER"
CLEAR
THRESHOLD CIRCUIT
PEAK DETECTOR
DISABLE
RAS
0 VOLT
FWD: TS2,TS5 ON
REV : TS3,TS4 ON
* IF THE WEN SWITCH IS NOT FITTED A WIRE LINK SHOULD BE PLACED BETWEEN A1 AND A2
O = TEST POINT

Fig. 13

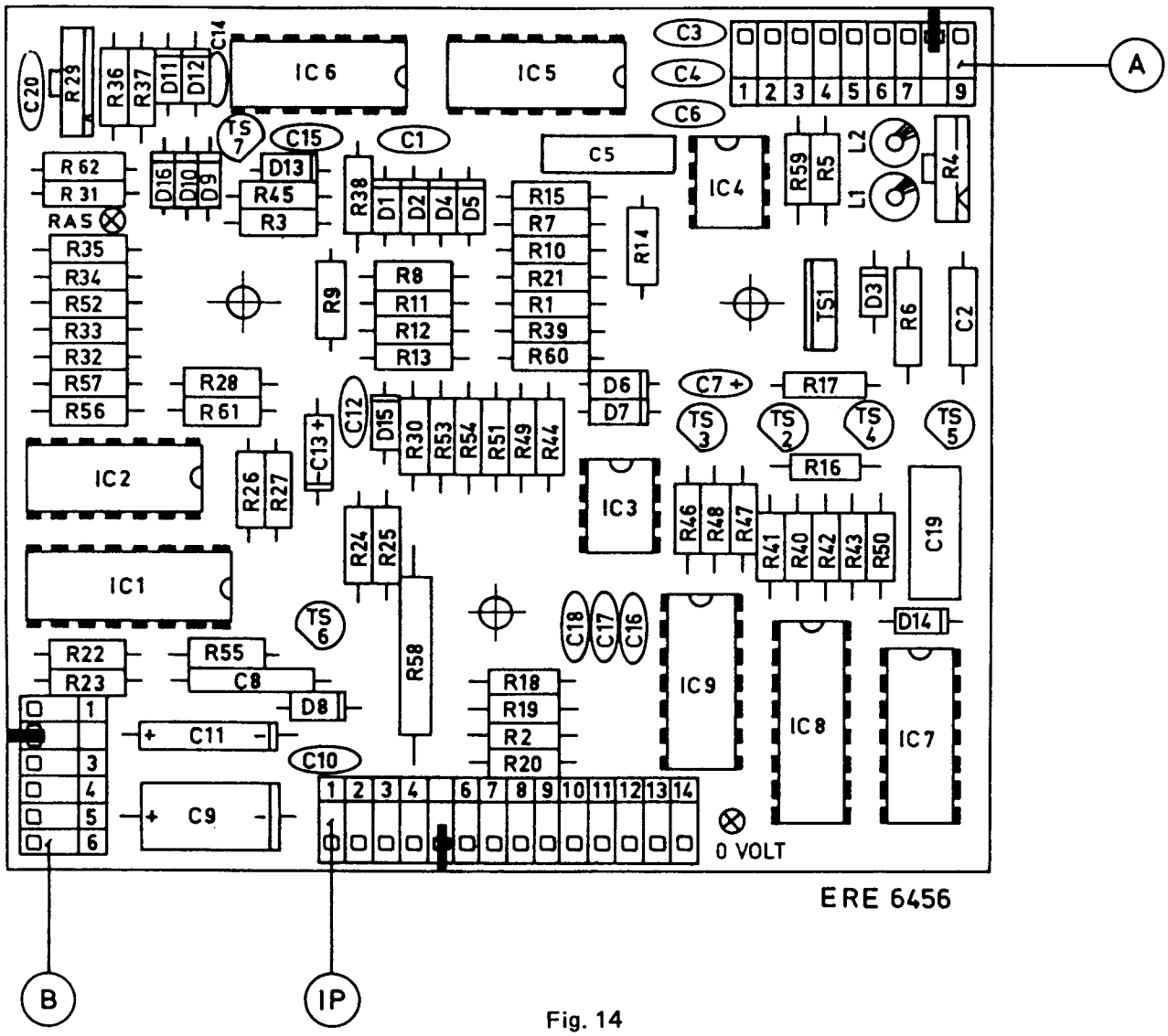
A
B
IP
IC 6
IC 5
IC 4
IC 2
IC 1
IC 3
IC 9
IC 8
IC 7
C20
R29
R36
R37
D11
D12
C14
C3
C4
C6
C5
C15
C1
TS 7
D13
R45
R3
R38
D1
D2
D4
D5
R15
R7
R10
R21
R1
R39
R60
R14
R59
R5
L2
L1
R4
R 62
R 31
RAS
D16
D10
D9
R35
R34
R52
R33
R32
R57
R56
R9
R8
R11
R12
R13
TS1
D3
R6
C2
R28
R61
C12
D15
R30
R53
R54
R51
R49
R44
D6
D7
C7 +
R17
TS 3
TS 2
TS 4
TS 5
R16
C13 +
R26
R27
R24
R25
R46
R48
R47
R41
R40
R42
R43
R50
C19
TS 6
R58
C18
C17
C16
D14
R22
R23
R55
C8
D8
R18
R19
R2
R20
C11
C10
C9
0 VOLT
ERE 6456

Fig. 14

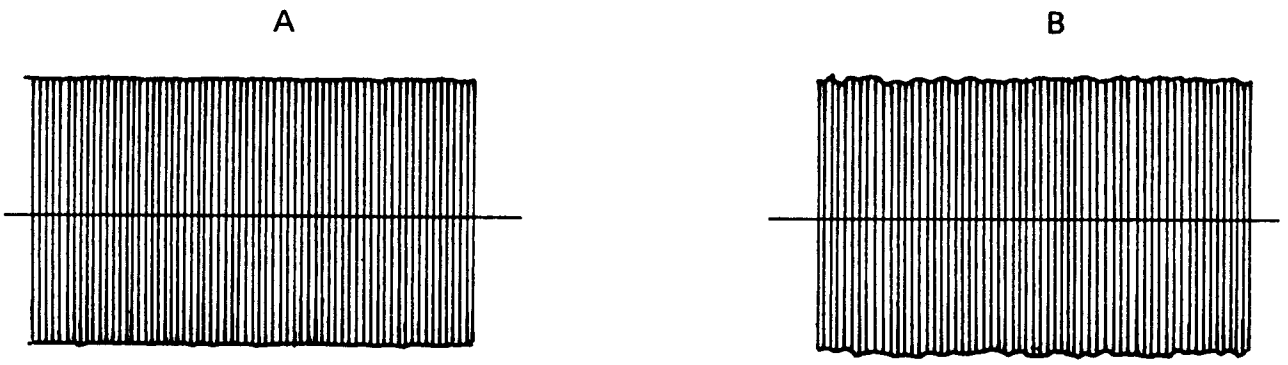
A
B
ERE 6457

Fig. 15

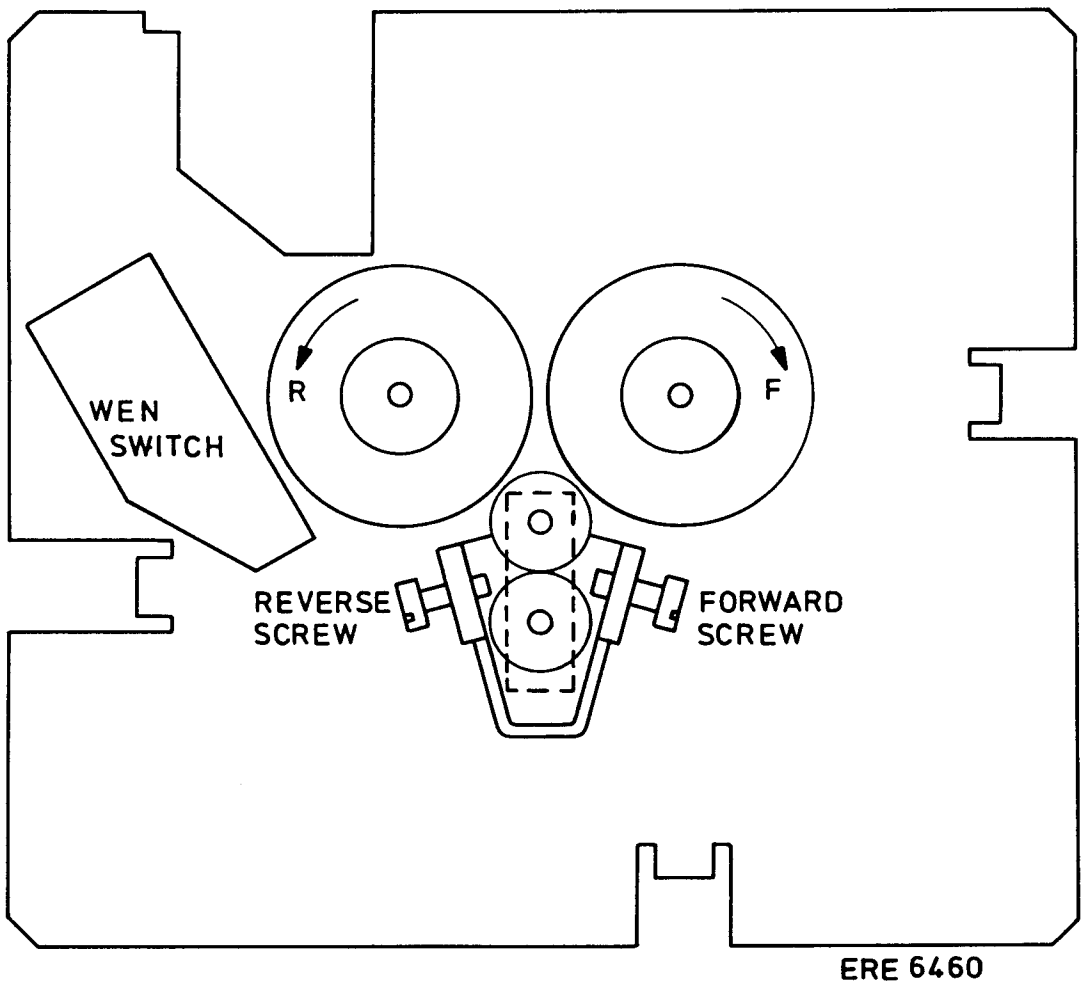
WEN
SWITCH
R
F
REVERSE
SCREW
FORWARD
SCREW
ERE 6460

Fig. 16

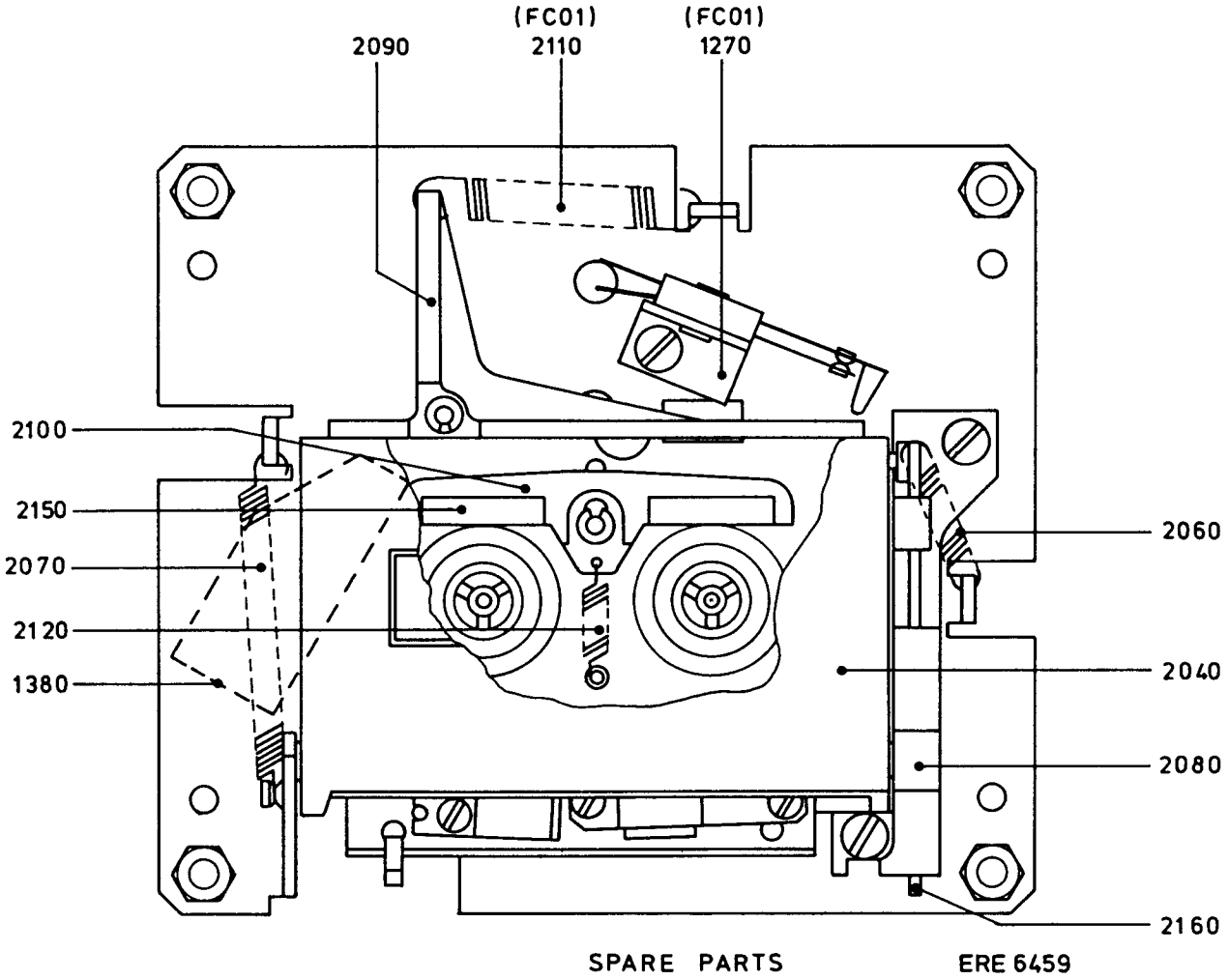
(FC01)
2110
(FC01)
1270
2090
2100
2150
2070
2120
1380
2060
2040
2080
2160
SPARE PARTS
ERE 6459

Fig. 17

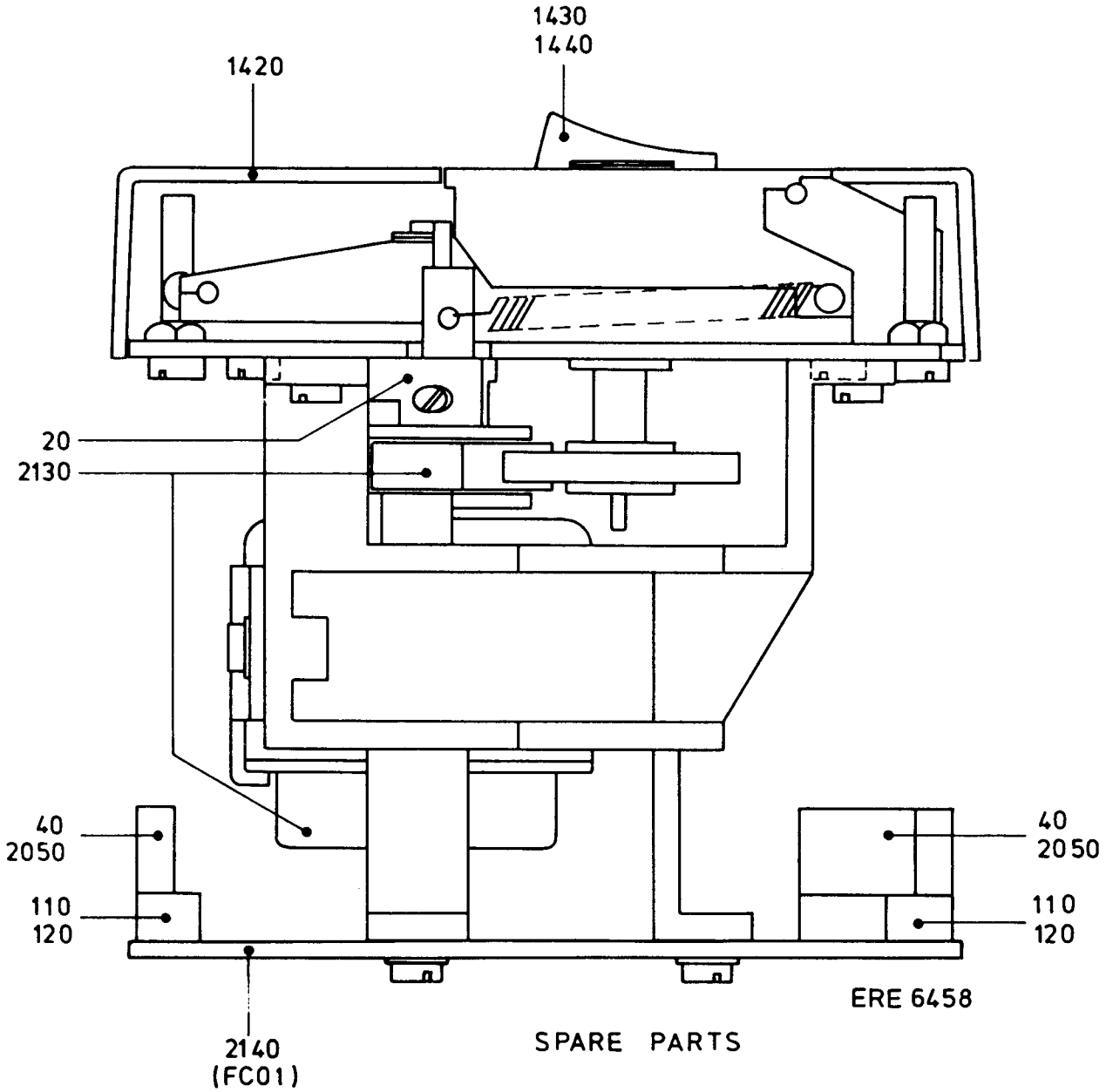
1430
1440
1420
20
2130
40
2050
110
120
40
2050
110
120
2140
(FC01)
ERE 6458
SPARE PARTS

Fig. 18