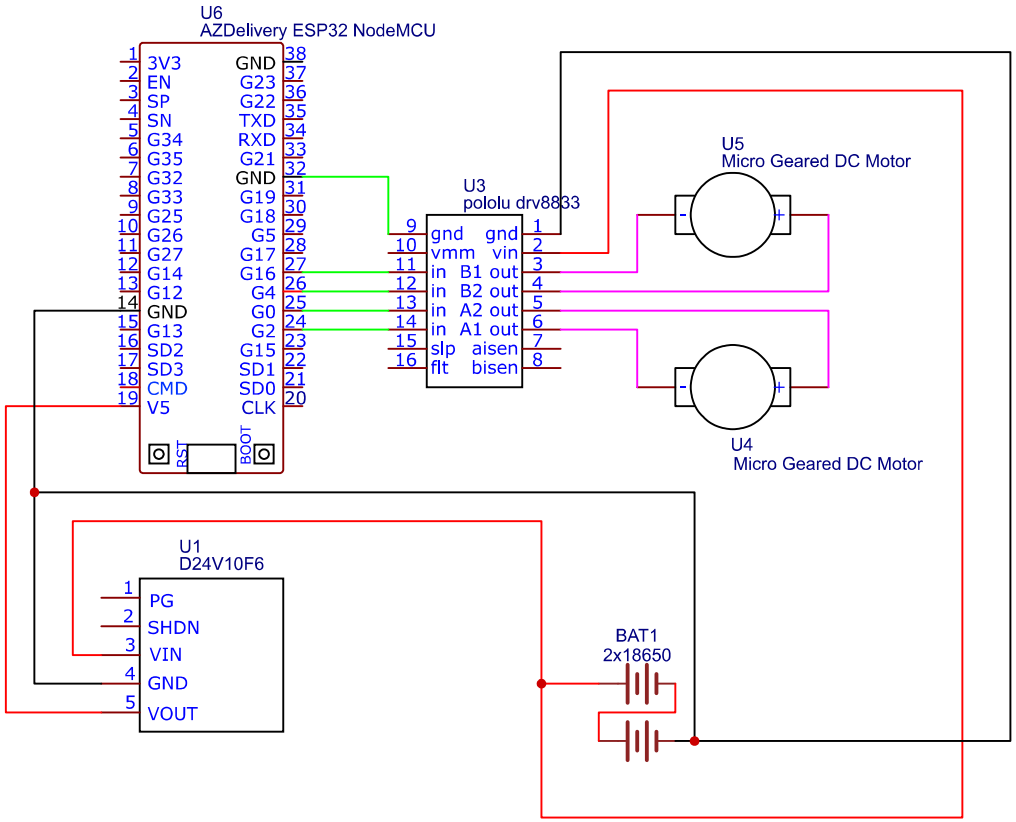


| | | |
|---|---|---|
| TITLE: Sheet_1 | | REV: 1.0 |
| 嘉立创EDA | Company: Your Company | Sheet: 1/1 |
| | Date: 2022-10-14 Drawn By: | |