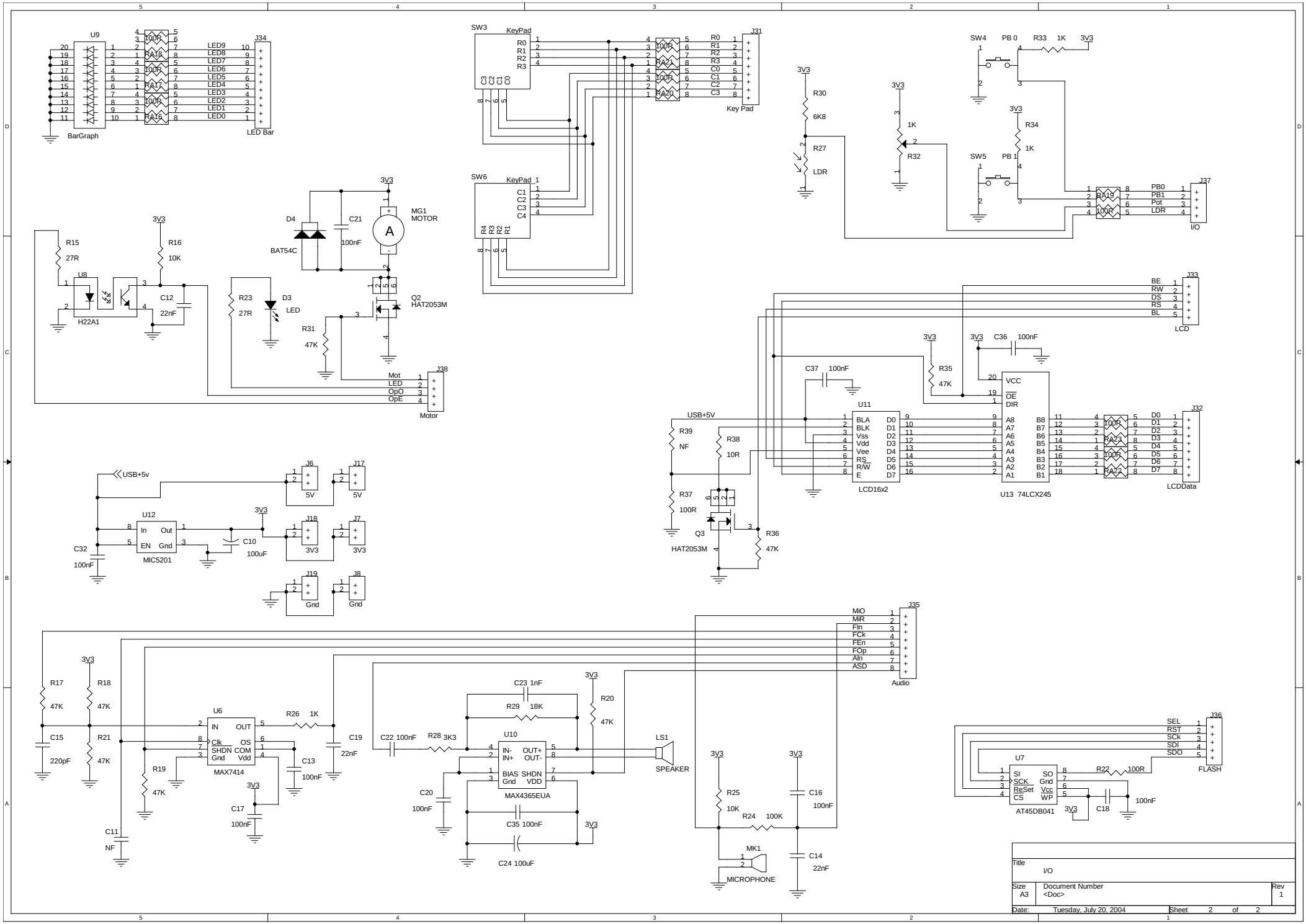
U9
BarGraph
J34
LED Bar
LED9
LED8
LED7
LED6
LED5
LED4
LED3
LED2
LED1
LED0
SW3
KeyPad
SW6
KeyPad
J31
Key Pad
R0
R1
R2
R3
C0
C1
C2
C3
C4
R4
3V3
R30
6K8
R27
LDR
R32
1K
SW4
PB 0
R33
1K
SW5
PB 1
R34
J37
I/O
PB0
PB1
Pot
LDR
MG1
MOTOR
D4
BAT54C
C21
100nF
R15
27R
R16
10K
U8
H22A1
C12
22nF
R23
27R
D3
LED
R31
47K
Q2
HAT2053M
J38
Motor
Mot
LED
OpO
OpE
J33
LCD
BE
RW
DS
RS
BL
C36
100nF
C37
100nF
R35
47K
U11
LCD16x2
BLA
BLK
Vss
Vdd
Vee
RS
R/W
E
D0
D1
D2
D3
D4
D5
D6
D7
VCC
OE
DIR
A8
A7
A6
A5
A4
A3
A2
A1
B8
B7
B6
B5
B4
B3
B2
B1
U13 74LCX245
J32
LCDData
USB+5V
R39
NF
R38
10R
R37
100R
Q3
HAT2053M
R36
47K
J6
5V
J17
5V
USB+5v
U12
MIC5201
In
Out
EN
Gnd
C32
100nF
C10
100uF
J18
3V3
J7
3V3
J19
Gnd
J8
Gnd
J35
Audio
MiO
MiR
FIn
FCk
FEn
FOp
AIn
ASD
R17
47K
R18
47K
C15
220pF
R21
47K
U6
MAX7414
IN
OUT
Clk
OS
SHDN
COM
Gnd
Vdd
R26
1K
C19
22nF
C13
100nF
R19
47K
C17
100nF
C11
NF
C23 1nF
R29
18K
R20
47K
C22 100nF
R28 3K3
U10
MAX4365EUA
IN-
IN+
OUT+
OUT-
BIAS
SHDN
Gnd
VDD
LS1
SPEAKER
C20
100nF
C35 100nF
C24 100uF
R25
10K
R24
100K
C16
100nF
C14
22nF
MK1
MICROPHONE
J36
FLASH
SEL
RST
SCk
SDI
SDO
U7
AT45DB041
SI
SCK
ReSet
CS
SO
Gnd
Vcc
WP
R22
100R
C18
100nF
Title
I/O
Size
A3
Document Number
<Doc>
Rev
1
Date:
Tuesday, July 20, 2004
Sheet
2
of
2