Command, Control & Telemetry Board

2026-02-04

Variant: PRELIMINARY

Rev V1

Page	Index	Page	Index	Page	Index	Page	Index
1	Cover Page	11		21		31	
2	Block Diagram	12		22		32	
3	CCT Board Schematic	13		23		33	
4	MCU & Peripherals	14		24		34	
5	USBC	15		25		35	
6	RS485	16		26		36	
7	Sensors	17		27		37	
8		18		28		38	
9		19		29		39	
10		20		30		40	

ADD FUNCTIONALITY FOR EXTERNAL WARNING LIGHT AT ROCKET FOR ARMING AND COUNTDOWN

PCB STITCHING VIAS

PCB VCUTS/PANEL? + TOOLING HOLES

TOP VIEW

3D render of your PCB here (Top View)

BOTTOM VIEW

3D render of your PCB here (Bottom View)

NOTES

Add a comment here

Not fitted components are marked as X

DRAFT - Very early stage of schematic, ignore details.
PRELIMINARY - Close to final schematic.
CHECKED - There shouldn't be any mistakes. Contact the engineer if you find any.
RELEASED - A board with this schematic has been sent to production.

PRELIMINARY

DESIGN CONSIDERATIONS

DESIGN NOTE: Example text for informational design notes.

DESIGN NOTE: Example text for debug notes.

DESIGN NOTE: Example text for cautionary design notes.

DESIGN NOTE: Example text for critical design notes.

LAYOUT NOTE: Example text for critical layout guidelines.

Comments:	Company: Southampton University Spaceflight Society		Variant: PRELIMINARY
	Board Name: Command, Control & Telemetry Board		Project Name: SULRE - Comet 1
Sheet Title: Sheet Title A	File Name: COMET1_CCT.kicad_sch	Designer: Ethan Wilson - ew8g21	Date: 2026-01-02 / Revision: V1
Sheet Path: /		Reviewer: TBD	Size: A3 / Sheet: 1 of 6

[2] Block Diagram

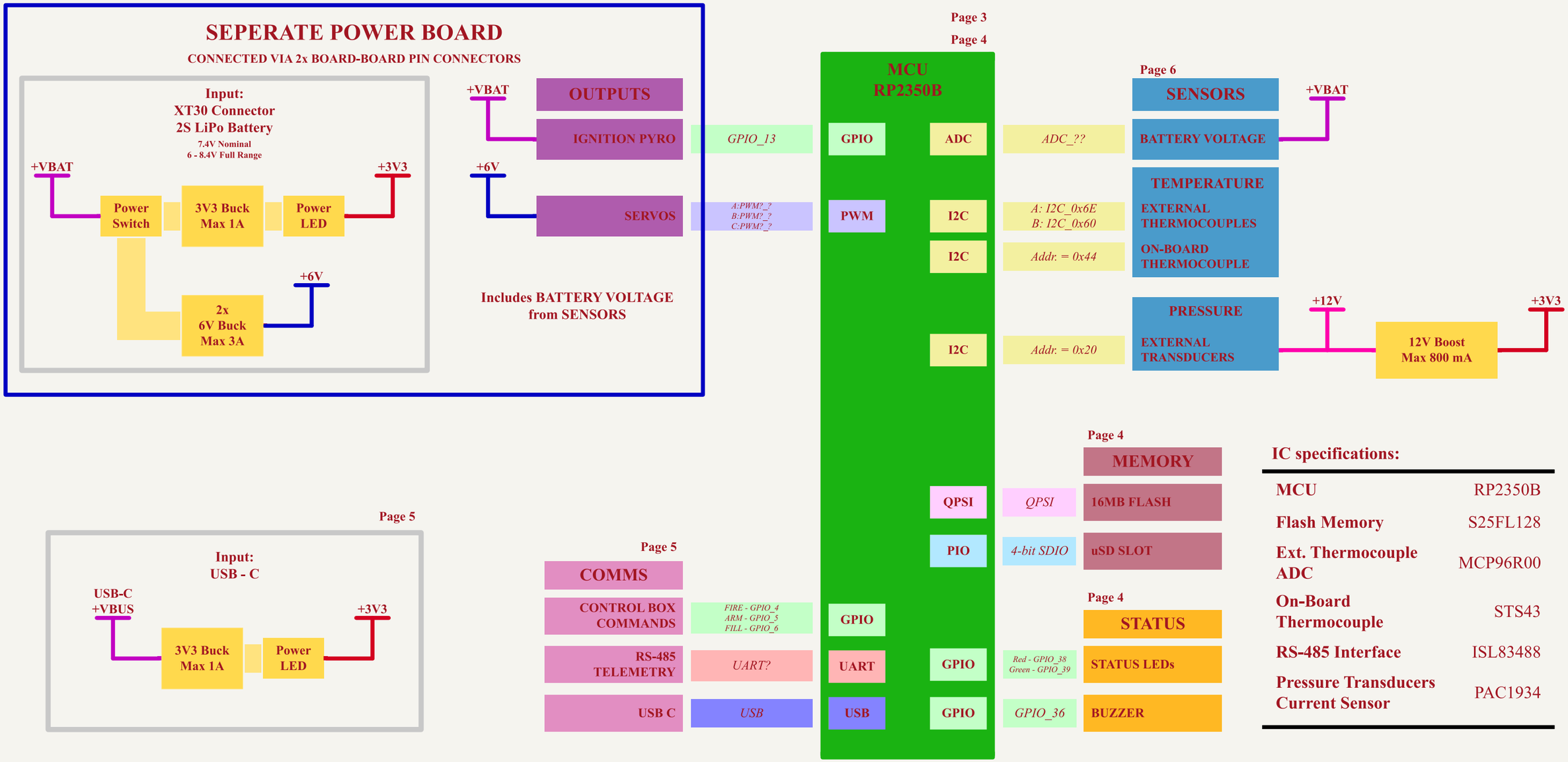

IC specifications:

MCU	RP2350B
Flash Memory	S25FL128
Ext. Thermocouple ADC	MCP96R00
On-Board Thermocouple	STS43
RS-485 Interface	ISL83488
Pressure Transducers Current Sensor	PAC1934

Comments: GRID - mm	Company: Southampton University Spaceflight Society		Variant: PRELIMINARY	
	Board Name: Command, Control & Telemetry Board		Project Name: SULRE - Comet 1	
Sheet Title: Block Diagram	File Name: Block Diagram.kicad_sch	Designer: Ethan Wilson - ew8g21	Date: 2026-01-02	Revision: V1
Sheet Path: /Block Diagram/		Reviewer: TBD	Size: A3	Sheet: 2 of 6

[3] CCT Board Schematic

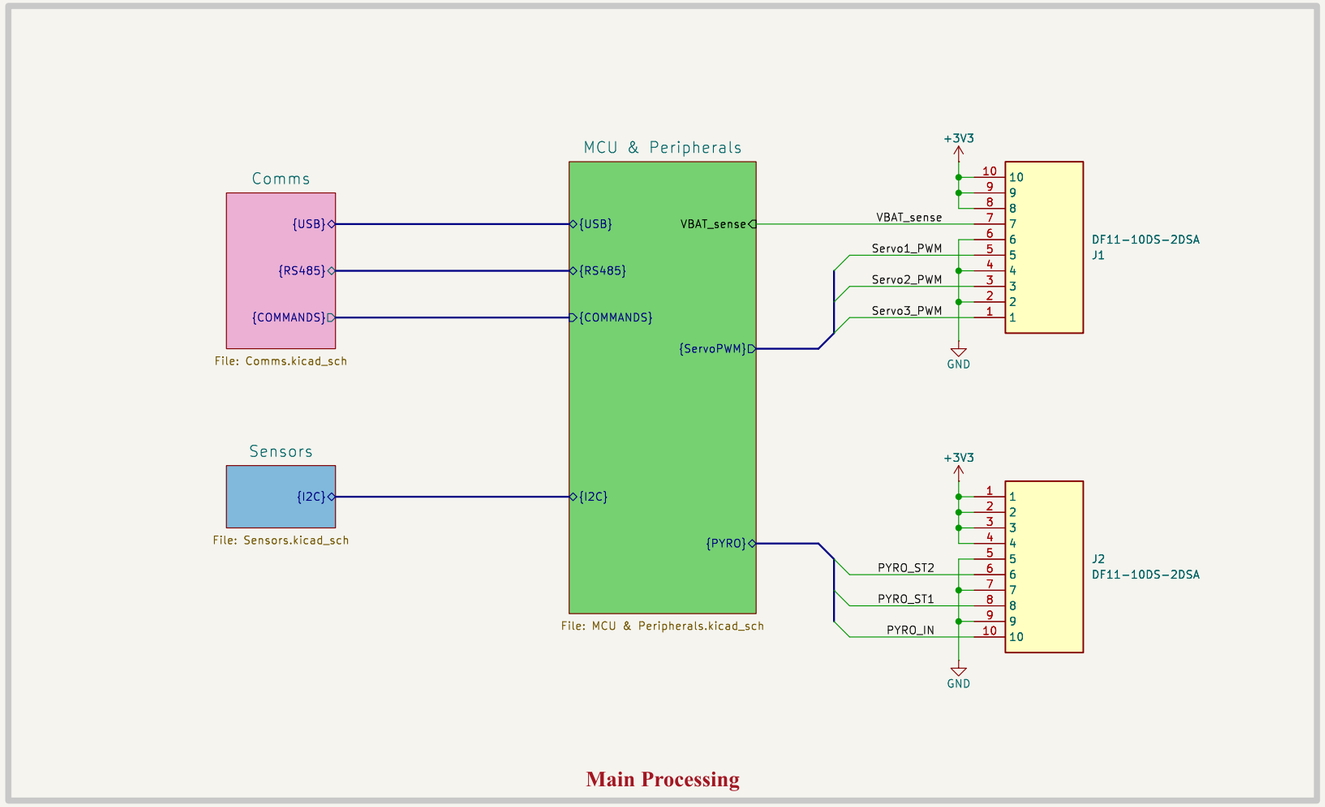

Main Processing

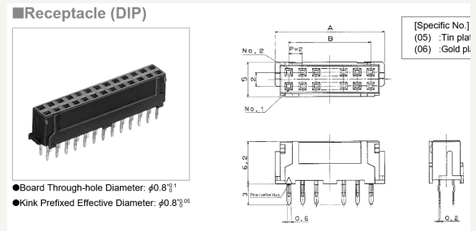

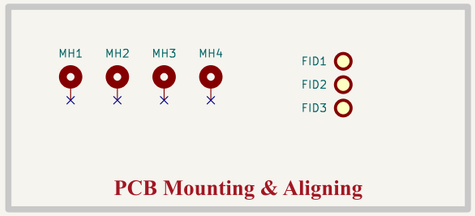

PCB Mounting & Aligning

ADD TOOLING HOLES FOR PCBA
https://jlcpcb.com/help/article/How-to-add-tooling-holes-for-PCB-assembly-order

Comments: GRID - mil (1.27mm)	Company: Southampton University Spaceflight Society		Variant: PRELIMINARY	
	Board Name: Command, Control & Telemetry Board		Project Name: SULRE - Comet 1	
Sheet Title: CCT Board Schematic	File Name: CCT Board Schematic.kicad_sch	Designer: Ethan Wilson - ew8g21	Date: 2026-01-02	Revision: V1
Sheet Path: /CCT Board Schematic/		Reviewer: TBD	Size: A3	Sheet: 3 of 6

[4] MCU & Peripherals

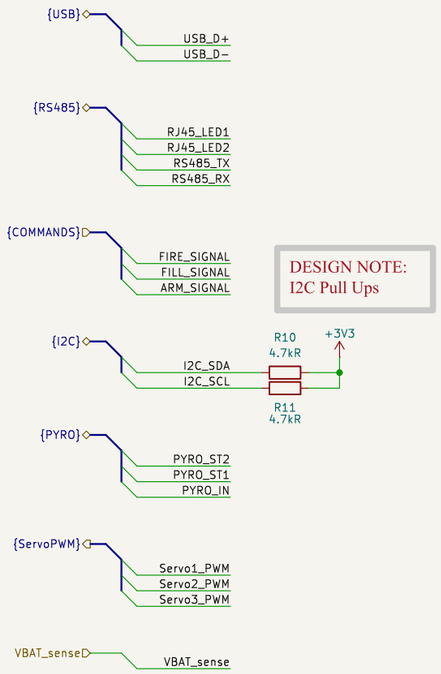

DESIGN NOTE:
I2C Pull Ups

Sheet Input & Outputs

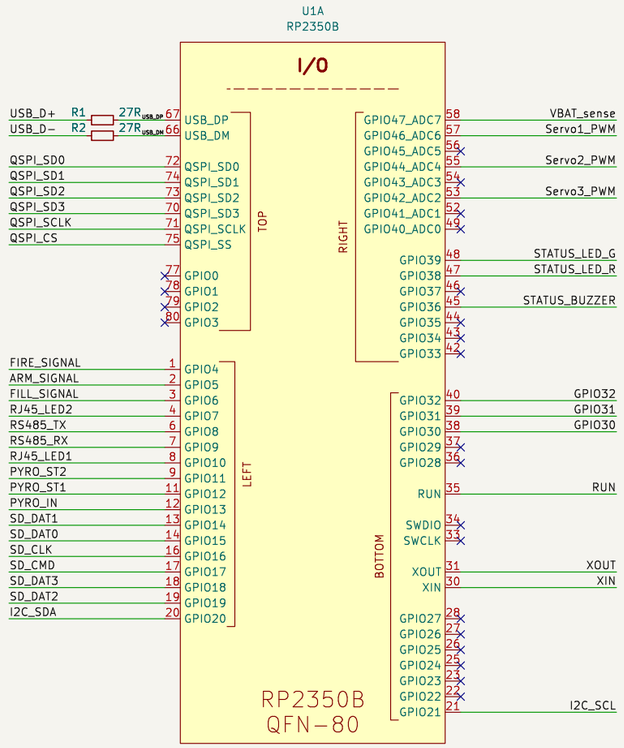

Sheet Input & Outputs

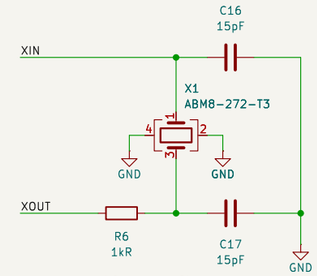

12MHz Crystal

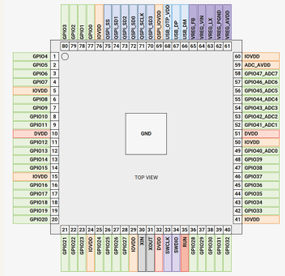

RP2350 Pin Location Reference

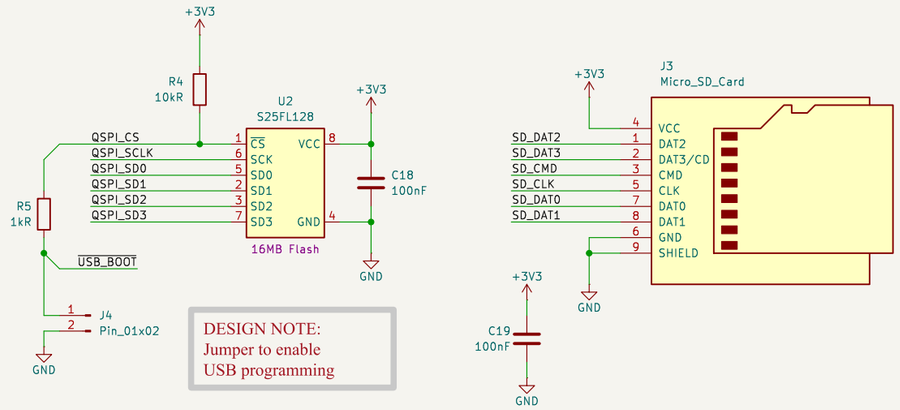

Memory

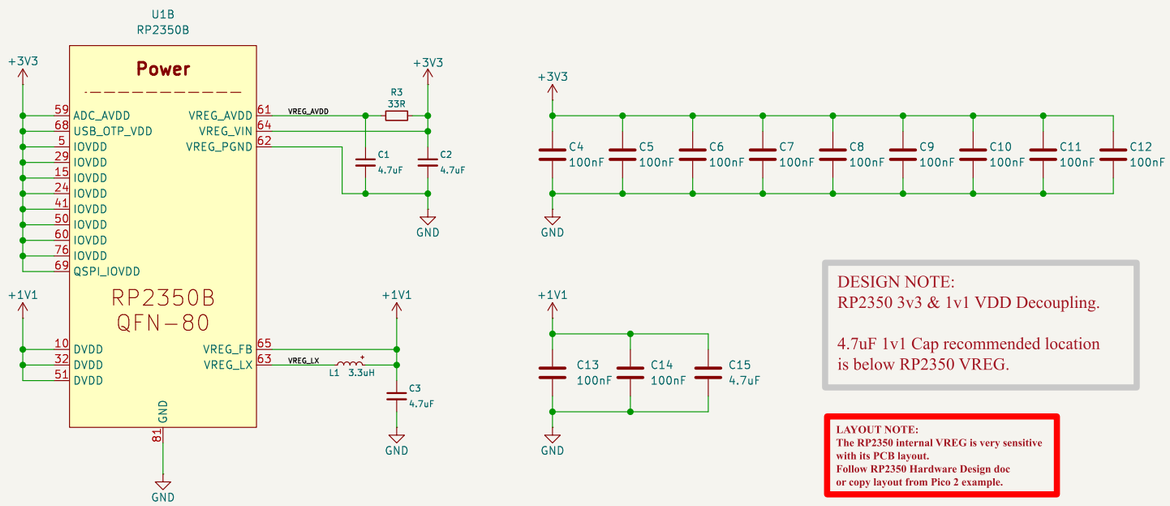

DESIGN NOTE:
RP2350 3v3 & 1v1 VDD Decoupling.

4.7uF 1v1 Cap recommended location is below RP2350 VREG.

LAYOUT NOTE:
The RP2350 internal VREG is very sensitive with its PCB layout.
Follow RP2350 Hardware Design doc or copy layout from Pico 2 example.

RP2350 Power

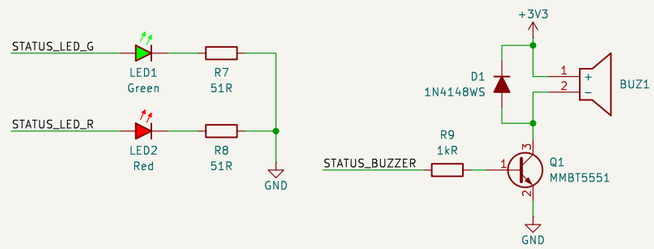

Status Indication

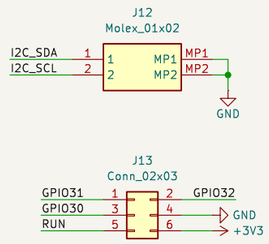

Extra Outputs

Comments: GRID - mil (1.27mm)	Company: Southampton University Spaceflight Society		Variant: PRELIMINARY	
	Board Name: **Command, Control & Telemetry Board**		Project Name: **SULRE - Comet 1**	
Sheet Title: MCU & Peripherals	File Name: MCU & Peripherals.kicad_sch	Designer: Ethan Wilson - ew8g21	Date: 2026-01-02	Revision: V1
Sheet Path: /CCT Board Schematic/MCU & Peripherals/		Reviewer: TBD	Size: A3	Sheet: 4 of 6

[5] USBC & RS485 Communications

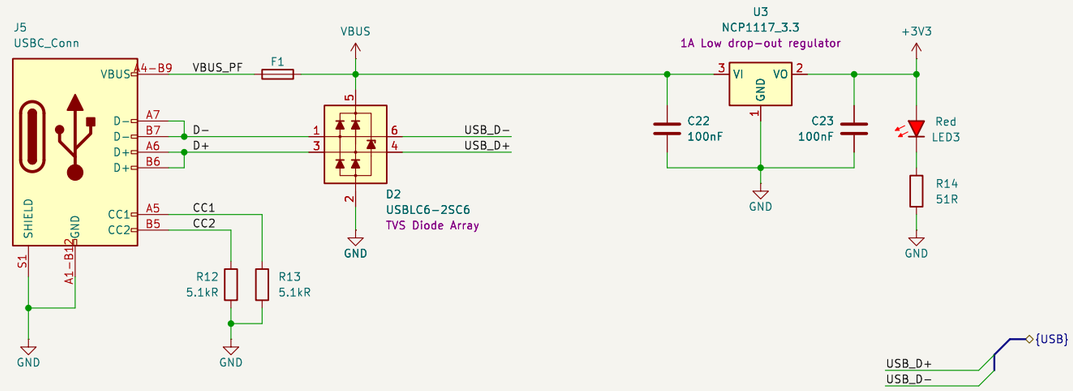

USB Data & Power

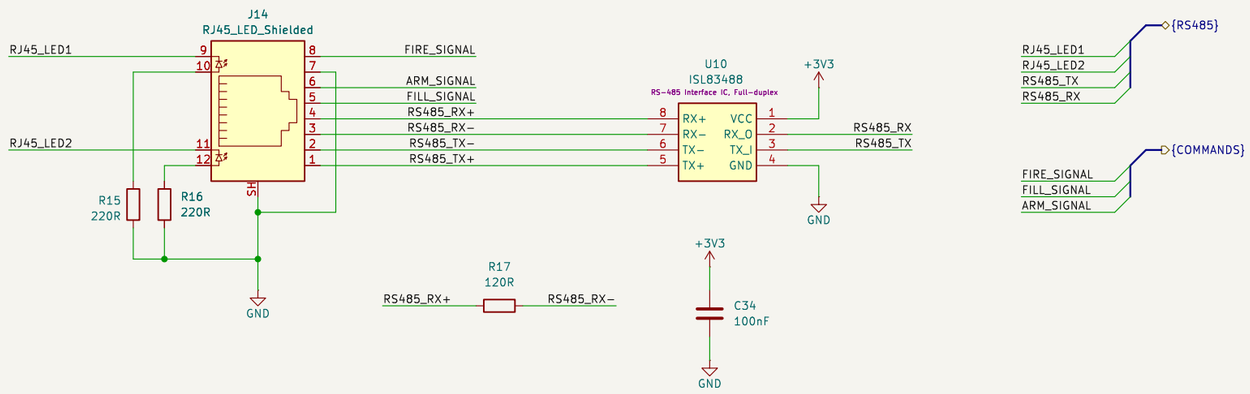

Command Signals & RS485 Telemetry

Comments: GRID - mil (1.27mm)	Company: Southampton University Spaceflight Society		Variant: PRELIMINARY	
	Board Name: Command, Control & Telemetry Board		Project Name: SULRE - Comet 1	
Sheet Title: USBC & RS485 Communications	File Name: Comms.kicad_sch	Designer: Ethan Wilson - ew8g21	Date: 2026-01-02	Revision: V1
Sheet Path: /CCT Board Schematic/Comms/		Reviewer: TBD	Size: A3	Sheet: 5 of 6

[6] Sensors

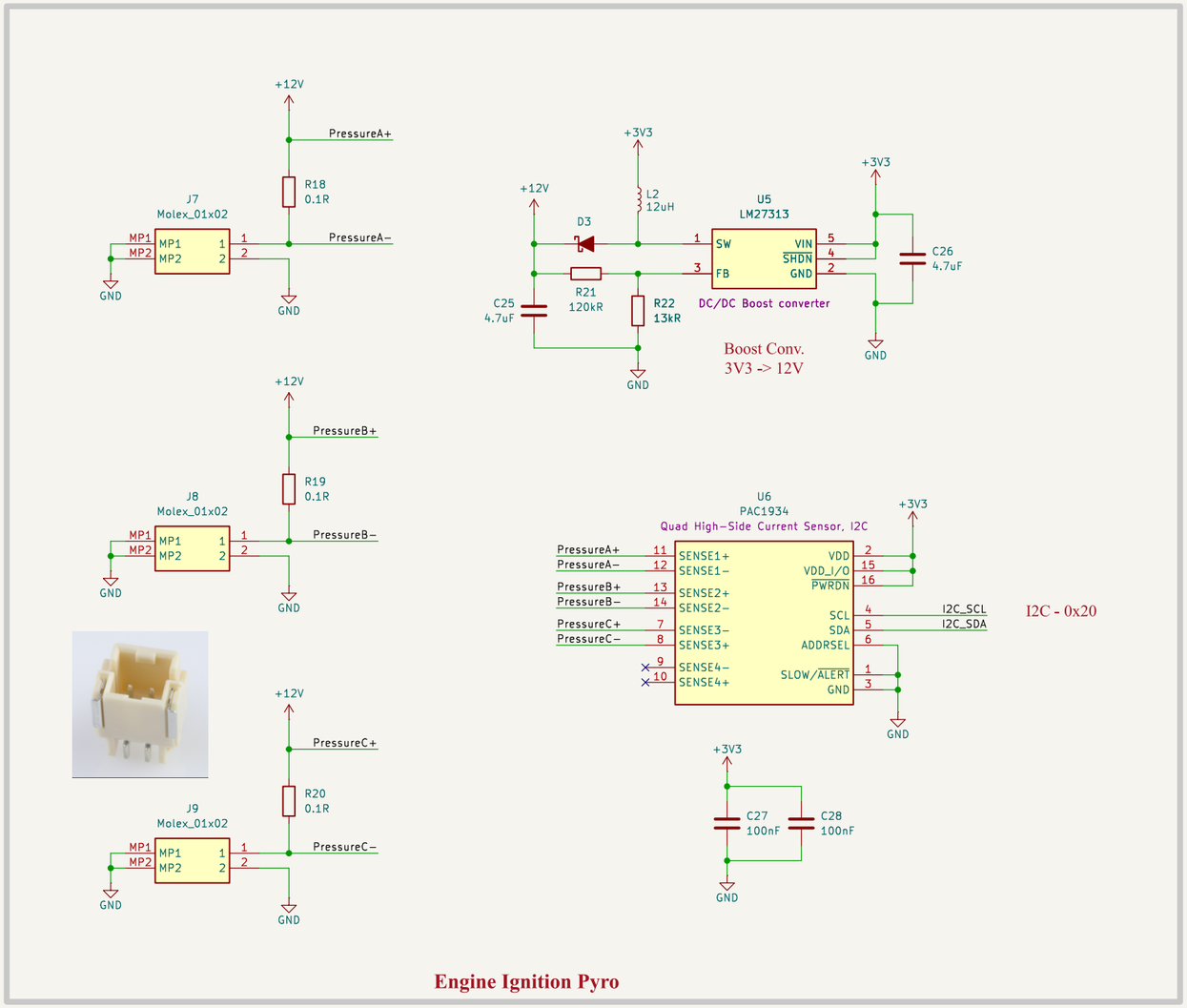

Engine Ignition Pyro

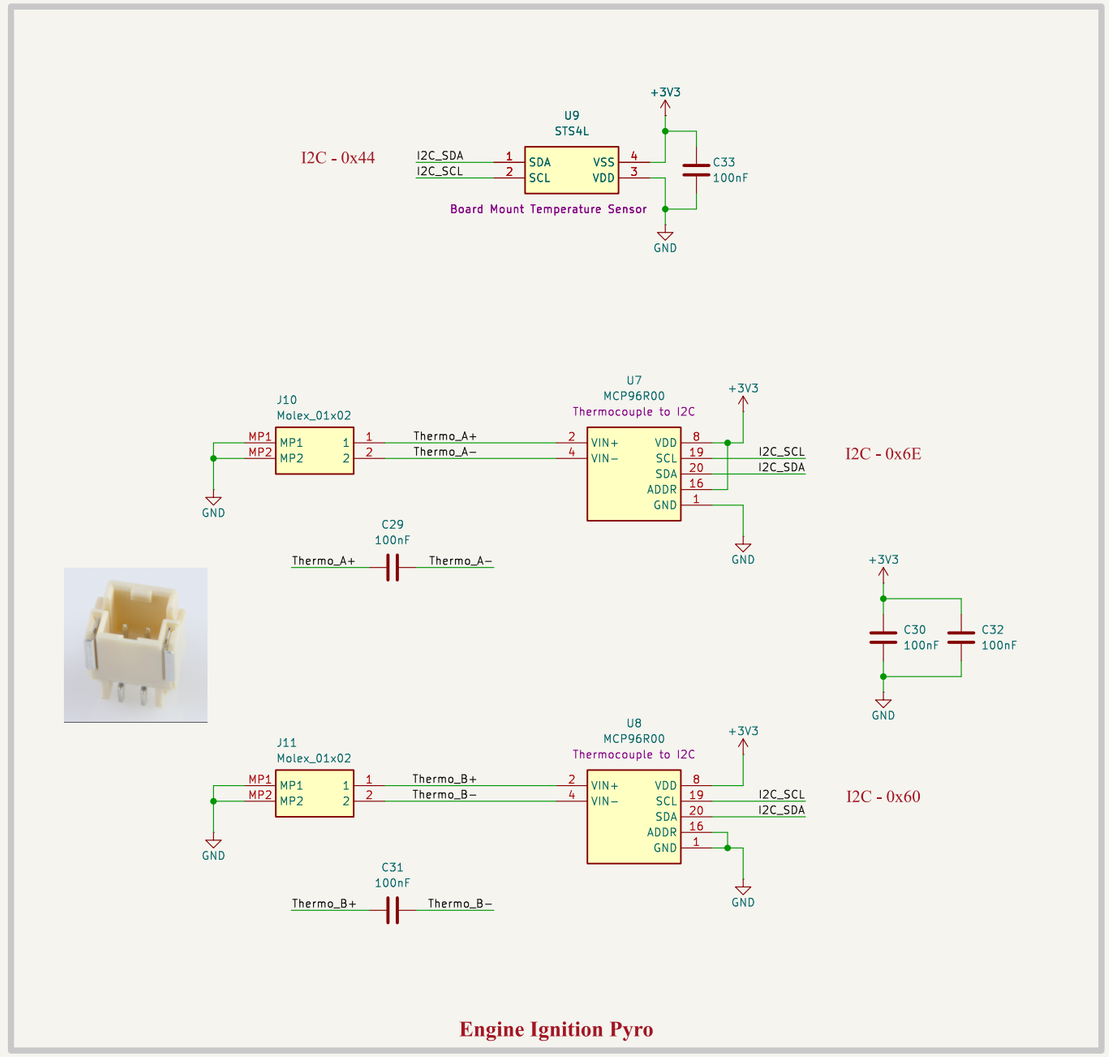

Engine Ignition Pyro

Comments: GRID - mil (1.27mm)	Company: Southampton University Spaceflight Society		Variant: PRELIMINARY	
	Board Name: Command, Control & Telemetry Board		Project Name: SULRE - Comet 1	
Sheet Title: Sensors	File Name: Sensors.kicad_sch	Designer: Ethan Wilson - ew8g21	Date: 2026-01-02	Revision: V1
Sheet Path: /CCT Board Schematic/Sensors/		Reviewer: TBD	Size: A3	Sheet: 6 of 6