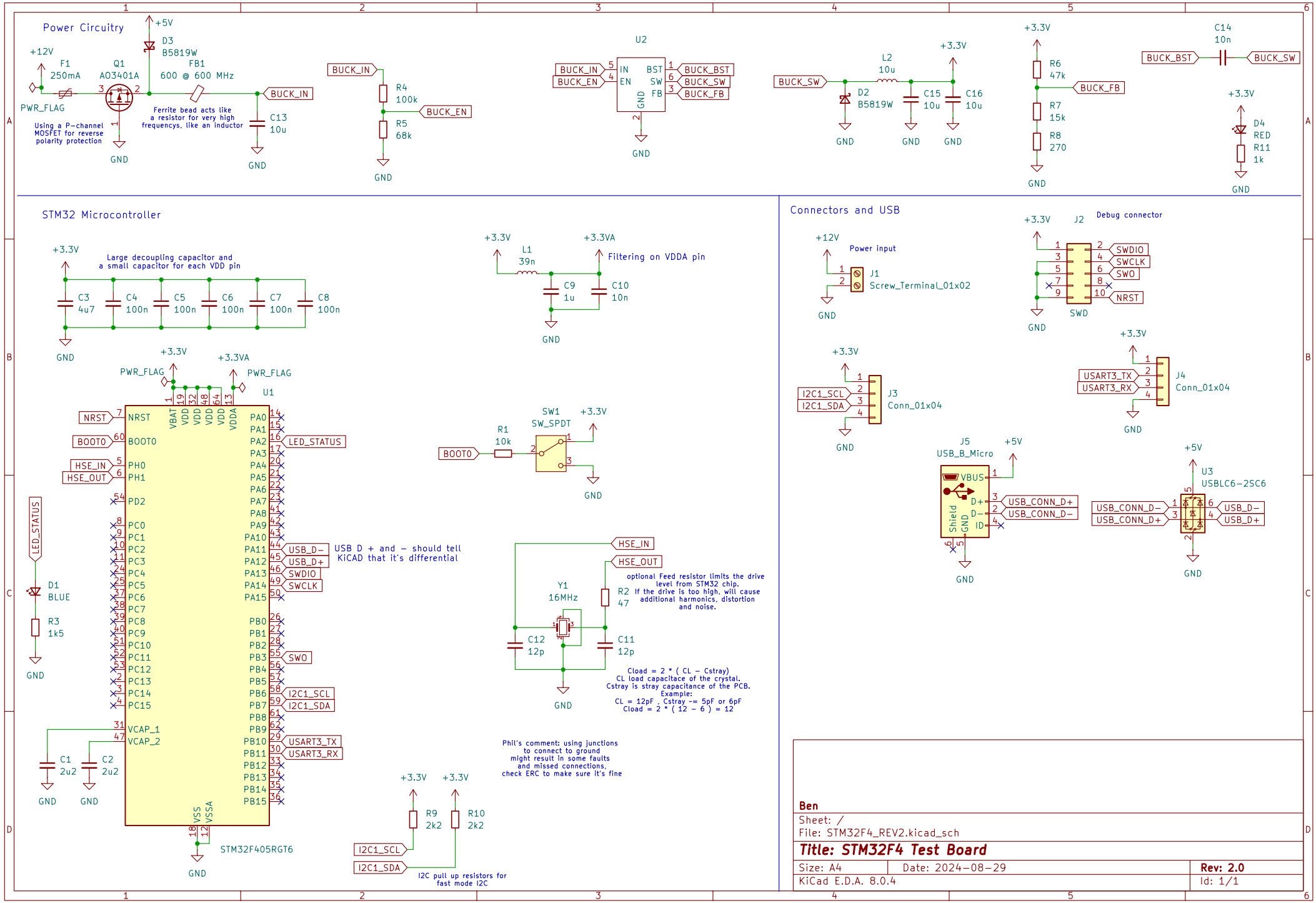

Ben

Sheet: /

File: STM32F4_REV2.kicad_sch

Title: STM32F4 Test Board

Size: A4	Date: 2024-08-29	Rev: 2.0
KiCad E.D.A. 8.0.4		Id: 1/1