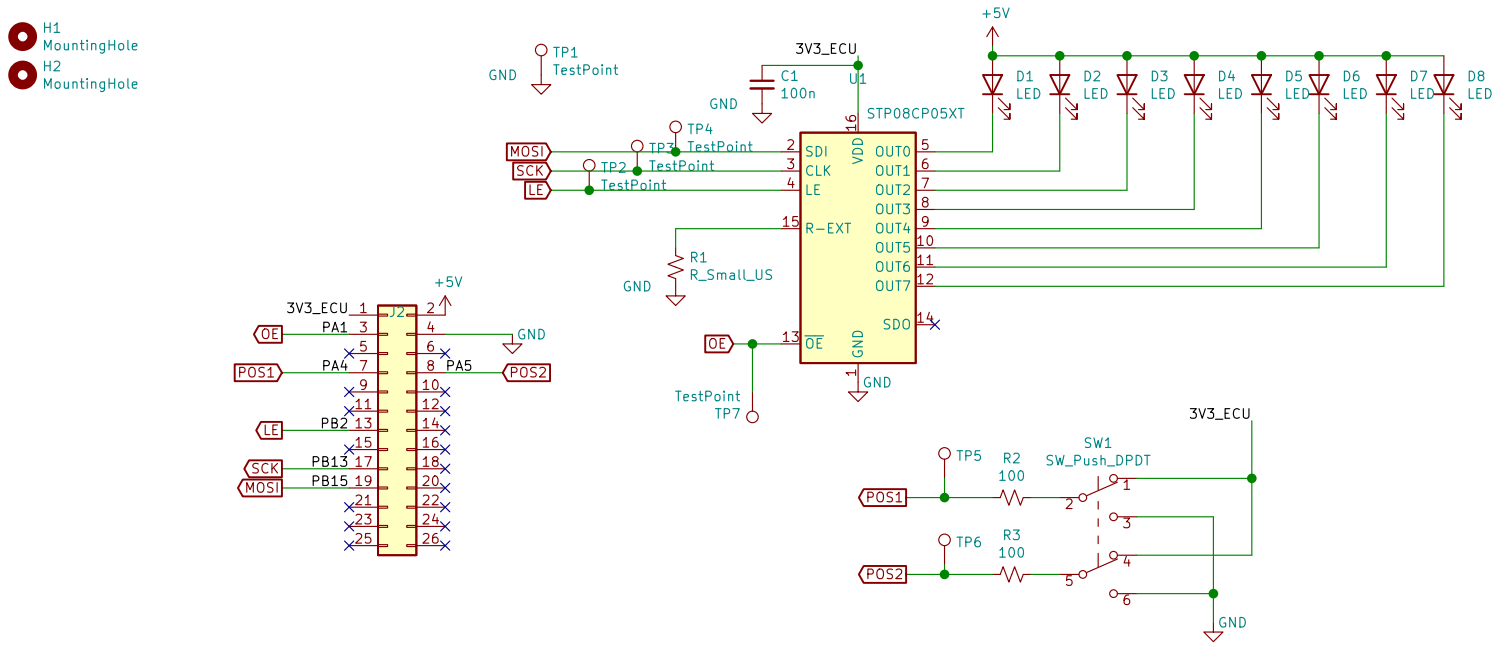

https://github.com/toyotainfotech/ramn
License: CC-BY-SA 4.0
Copyright (c) 2020 TOYOTA MOTOR CORPORATION. ALL RIGHTS RESERVED.

Sheet: /
File: microcar_head.sch

Title: RAMN V1BETA – Body

Size: A4	Date: 2019-12-10	**Rev: BETA**
KiCad E.D.A. kicad (5.1.7)-1		Id: 1/1