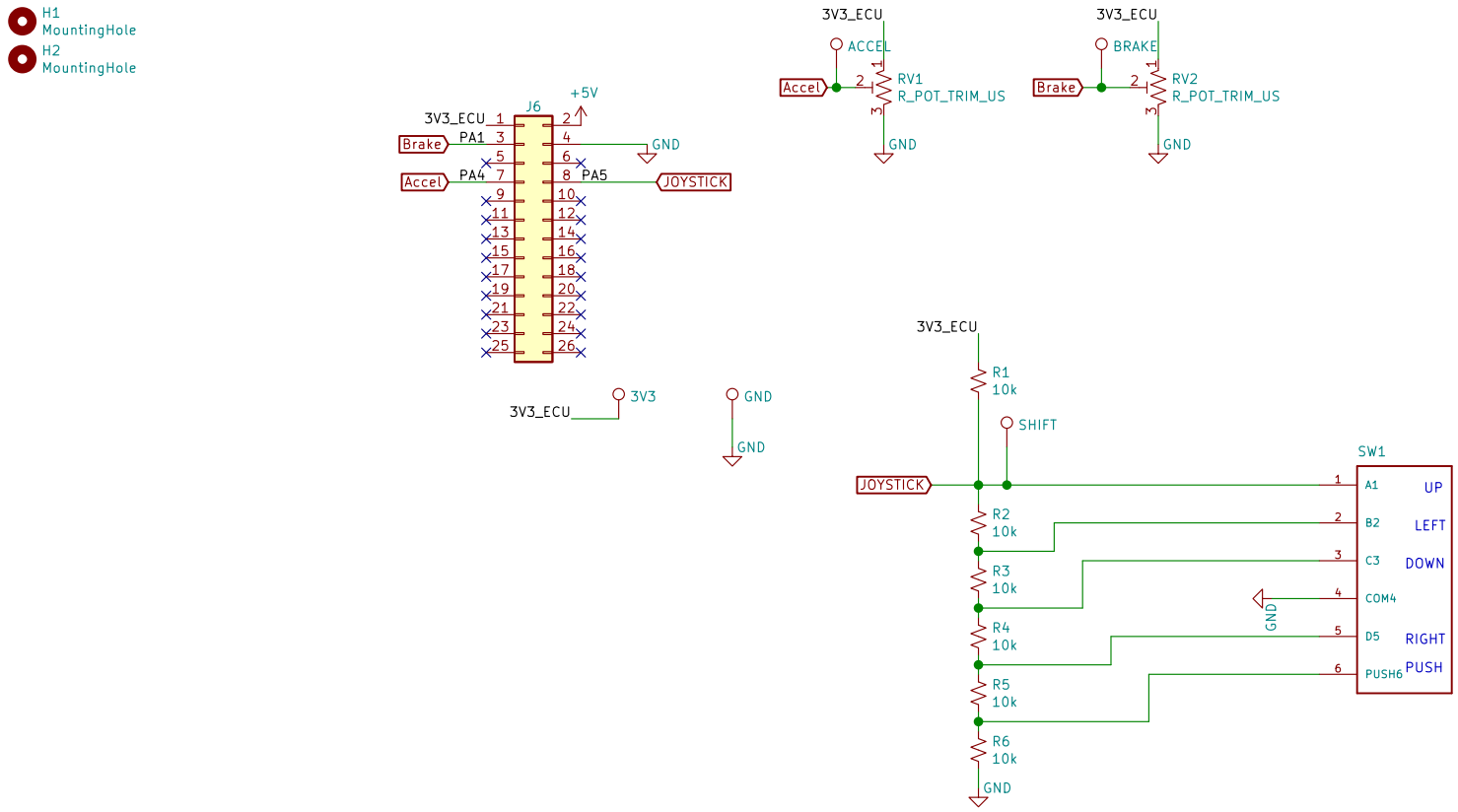

https://github.com/toyotainfotech/ramn
License: CC BY-SA 4.0

Copyright (c) 2020 TOYOTA MOTOR CORPORATION. ALL RIGHTS RESERVED.

Sheet: /
File: powertrain.sch

Title: Powertrain – RAMN: Resistant Automotive Miniature Network V1

Size: A4	Date: 2020-12-02	**Rev: A**
KiCad E.D.A. eeschema (5.1.8)-1		Id: 1/1