MINI PROJECT 1

OBJECTIVES

No.	Topics	Requirements
1	Design a combinational circuit: ➢ A 1-bit Full Adder.	➢ Complete the truth table, schematic, and symbol for a 1-bit Full Adder. ➢ Run transient simulation. ➢ Create layouts for each logic gate, then show DRC confirmation and corresponding schematic with proof of LVS.

EXPERIMENT– MINI PROJECT 1

Objective: Design a combinational circuit – a 1-bit Full Adder.

Requirements:

- Complete the truth table, schematic, and symbol for each component then run transient simulation.
- Define the speed of your design.
- Create layouts for each logic gate, then show DRC confirmation and corresponding schematic with proof of LVS.

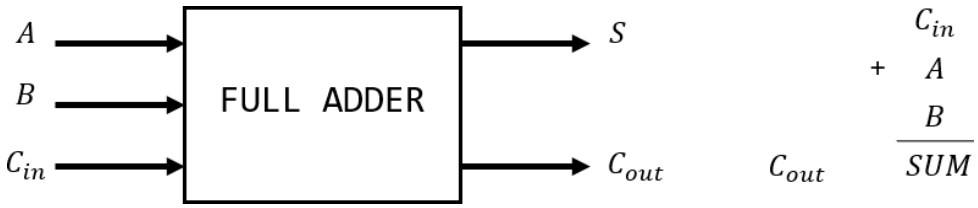

Figure 1 Block diagram of FA.

1. **The truth table**

A	B	C_{in}	S	C_{out}	Carry Status
0	0	0	0	0	**Delete**
0	0	1	1	0	**Delete**
0	1	0	1	0	**Propagate**
0	1	1	0	1	**Propagate**
1	0	0	1	0	**Propagate**
1	0	1	0	1	**Propagate**
1	1	0	0	1	**Generate**
1	1	1	1	1	**Generate**

Table 1 The truth table of 1-bit Full Adder.

$$S = A'B'C_{in} + A'BC_{in}' + AB'C_{in}' + ABC_{in} = A \oplus B \oplus C_{in}$$

$$C_{out} = BC_{in} + AC_{in} + AB + ABC_{in} = (A + B)C_{in} + AB$$

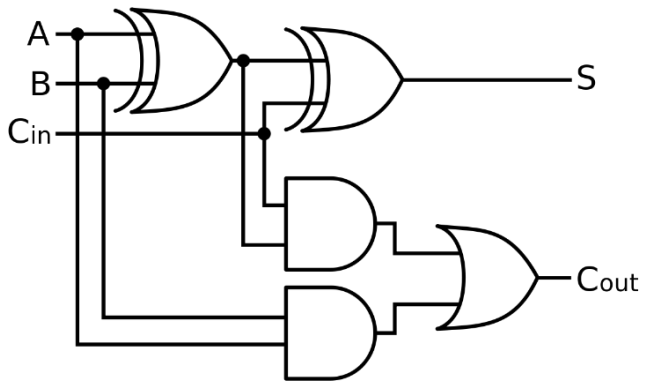

Figure 2 Logic circuit of FA.

Trong circuit của FA gồm có 2 cổng EX-OR2 , 2 cổng AND2 và một cổng OR2. Cổng AND2 và cổng OR2 nhóm chúng em đã tiến hành vẽ và thiết kế ở lab trước nên mini project nên nhóm chúng em sẽ thực hiện thiết kế và vẽ layout của cổng EX-OR2.

Cổng EX-OR2

1. **Schematic of EX-OR2**

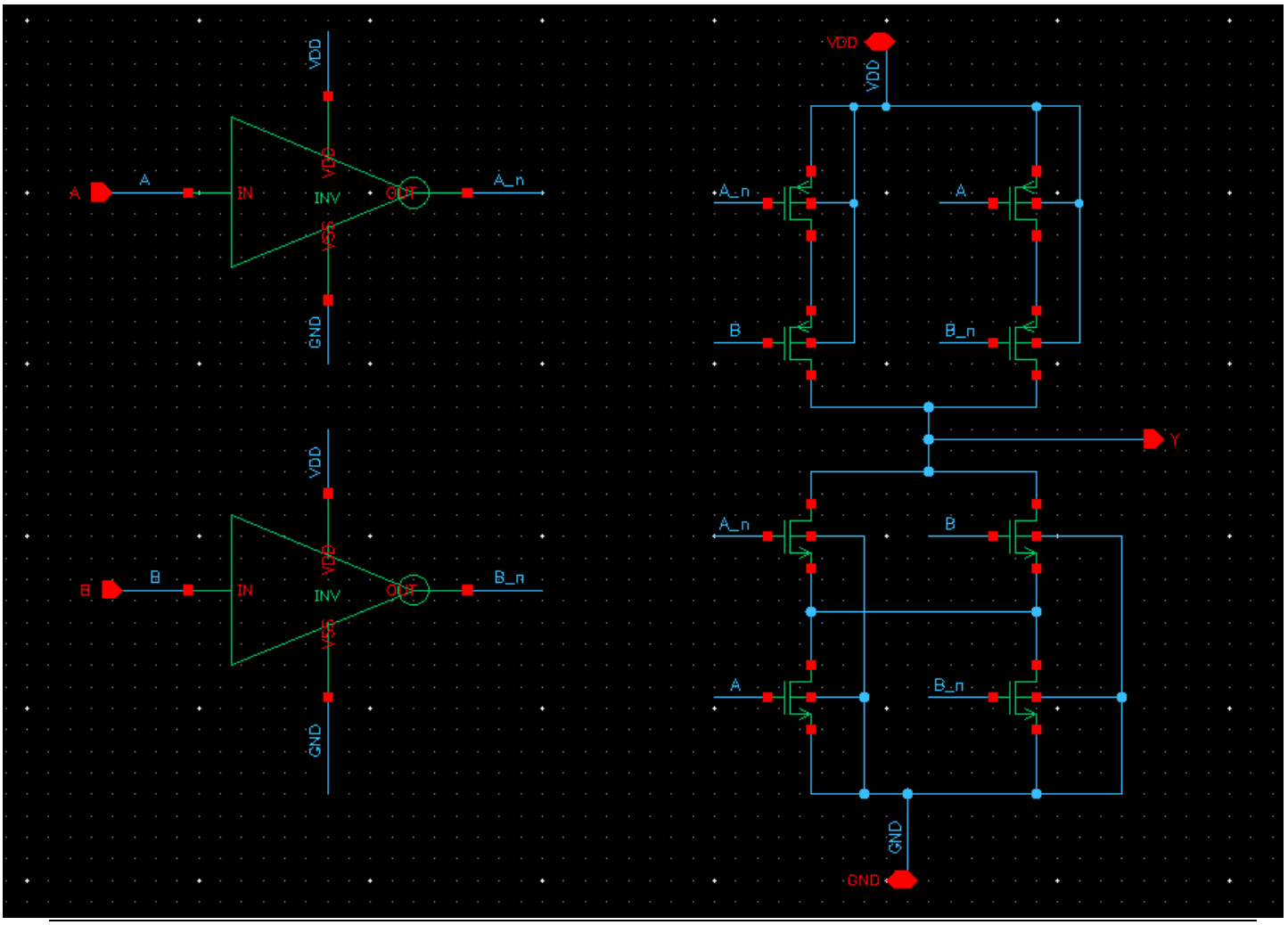

2. Symbol of EX-OR2

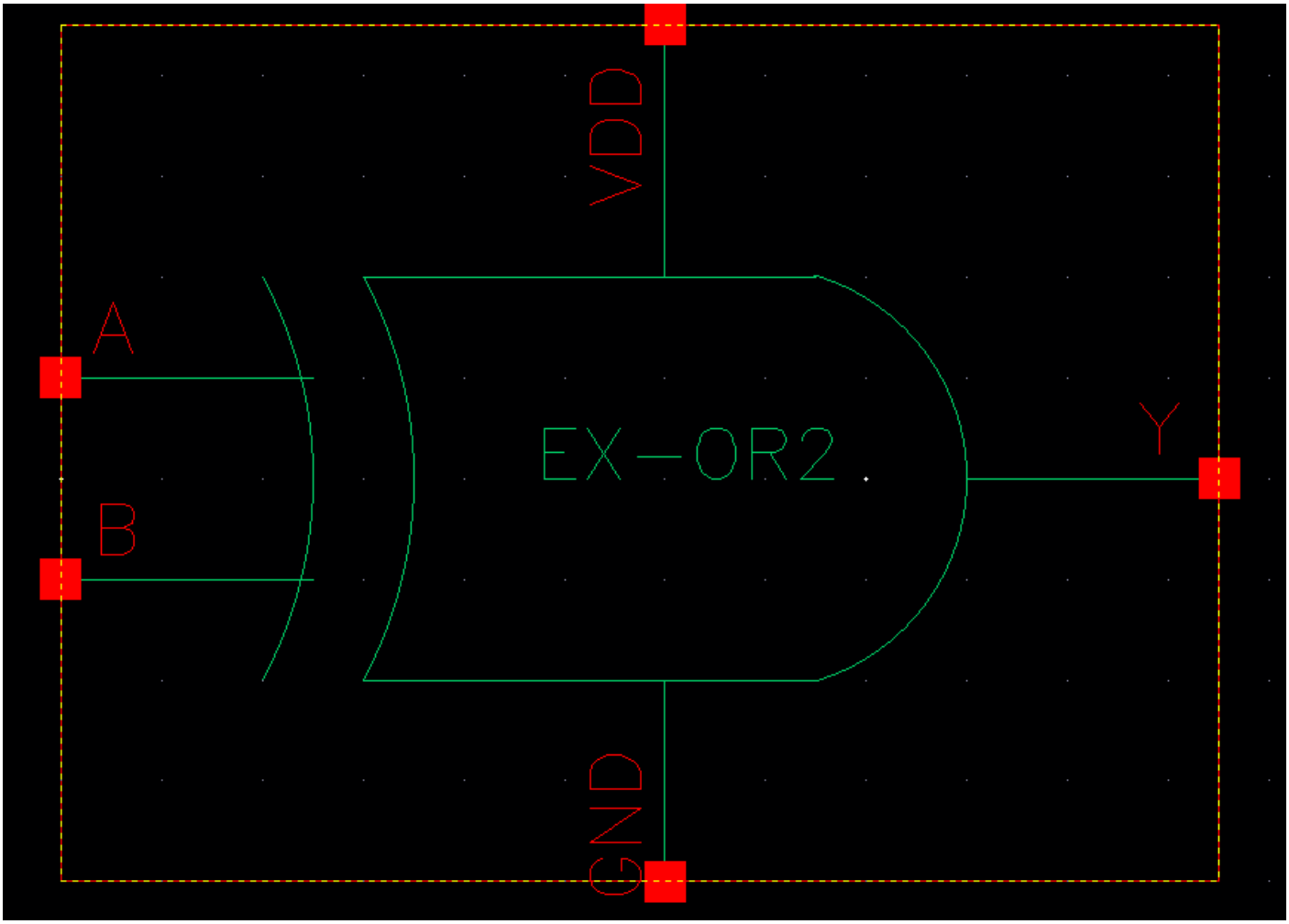

Figure : Symbol of EX-OR2

3. DC Analysis simulation:

Condition 1: A Sweep, B = 1V

V_{in}	0.1V	0.2V	0.3V	0.4V	0.5V	0.6V	0.7V	0.8V	0.9V	1.0V
V_{out}	999.38 mV	994.5 mV	963.6 mV	840.8 mV	137.98 mV	51.45 mV	15.325 mV	2.73 mV	361.31 uV	78.572 uV

Table : The output voltage values in Condition 1

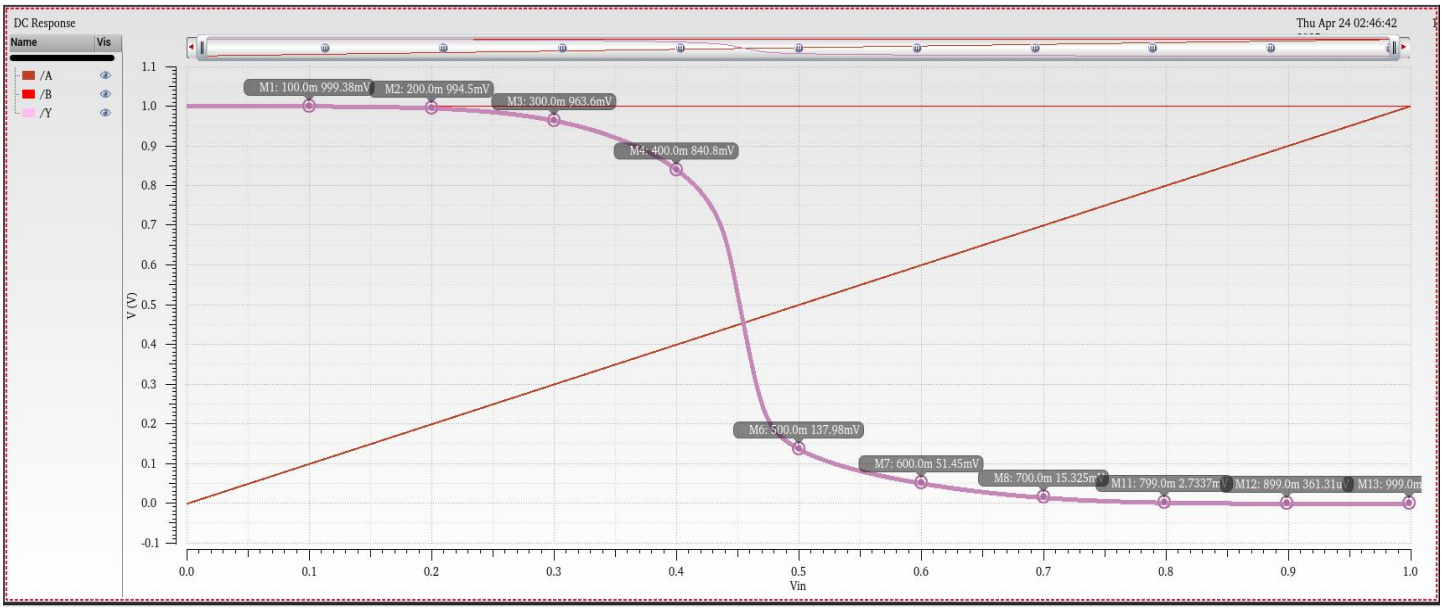

Figure : Voltage transfer curve of EX-NOR2 in Condition 1

Condition 2: A = 1V, B Sweep

V_{in}	0.1V	0.2V	0.3V	0.4V	0.5V	0.6V	0.7V	0.8V	0.9V	1.0V
V_{out}	998.956 mV	990.57 mV	947.55 mV	790.82 mV	151.74 mV	54.955 mV	21.38 mV	4.9278 mV	640.93 uV	79.163 uV

Table : The output voltage values in Condition 2

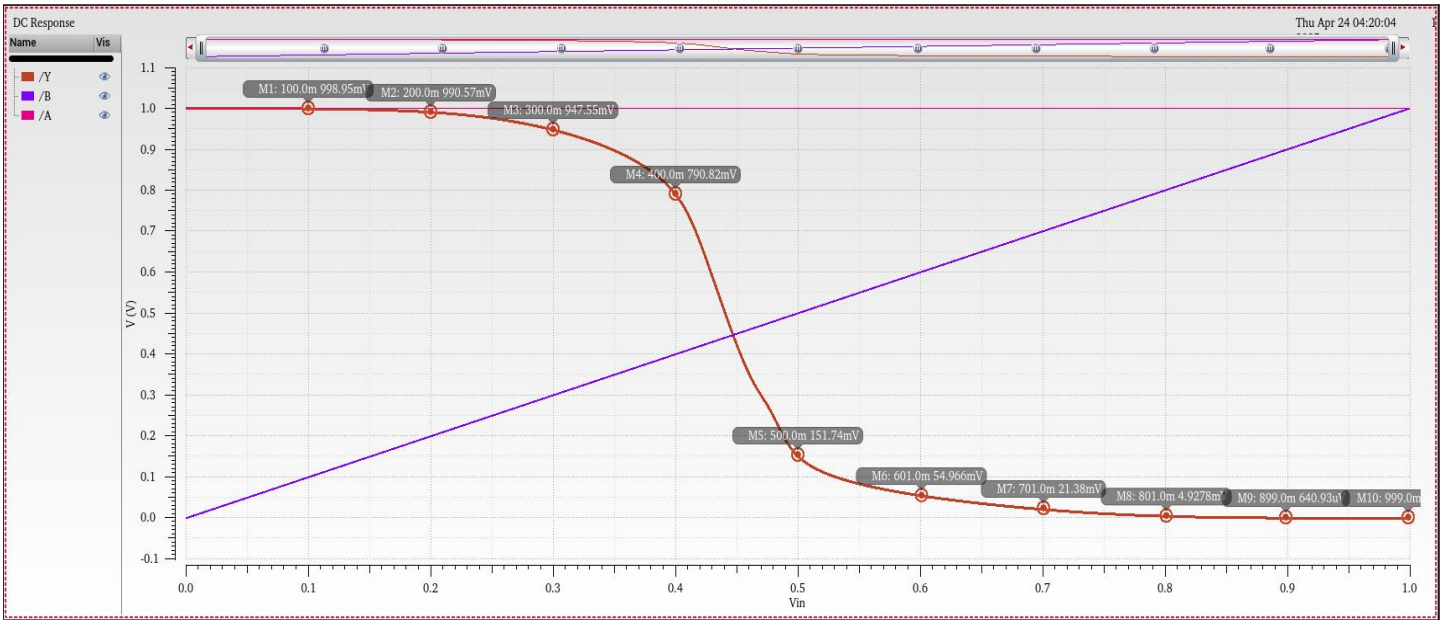

Figure : Voltage transfer curve of EX-NOR2 in Condition 2

4. Transient simulation:

Parameters	Value		Note
V_{dd}	1V		
C_{load}	1fF		
	In1	**In2**	
Voltage 1	0V	0V	Parameters for vpulse
Voltage 2	1V	1V	
Rise time	1p	1p	
Fall time	1p	1p	
Delay	0.65n	0.8n	
Pulse width	1n	1n	
Period	4n	2n	

Table: Parameters for transient simulation

Testbench circuit for EX-OR2:

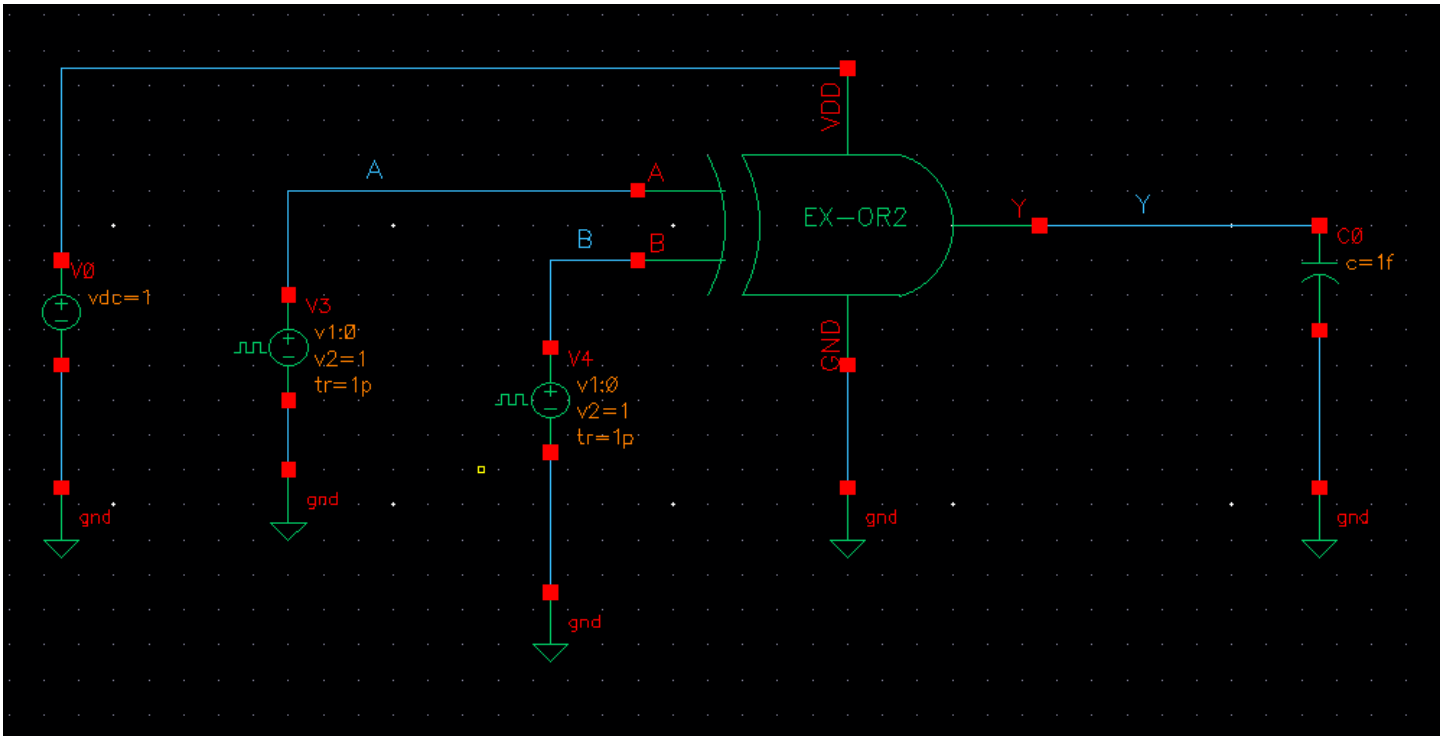

Figure: The testbench of EX-OR2

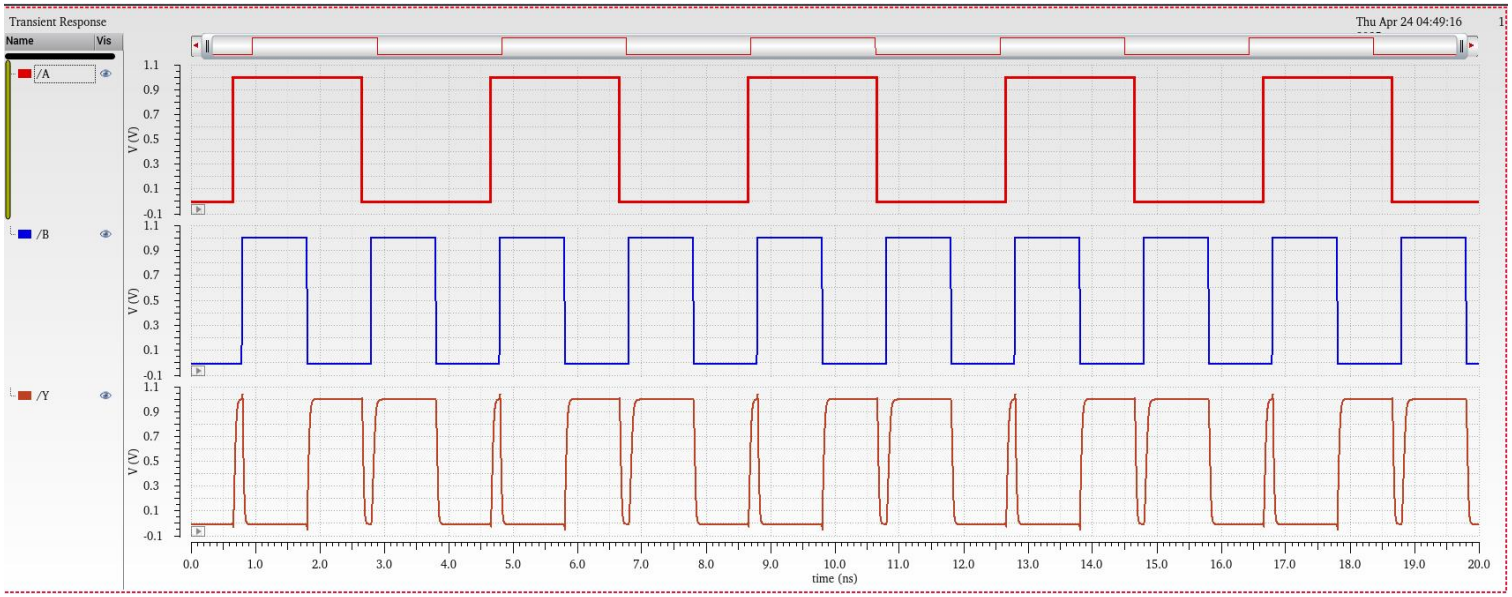

Figure: Input and output waveforms of EX-OR2

Chúng em đã vẽ ra được sơ đồ mạch cũng như tạo thành công biểu tượng của cổng logic EX-OR2, bên cạnh đó chúng em cũng đã khảo sát và mô phỏng và thu được các đồ thị thể hiện hoàn toàn phụ hợp với nguyên lí hoạt động của cổng logic EX-OR2.

A 1-bit Full Adder

2.Schematic of 1-bit full adder

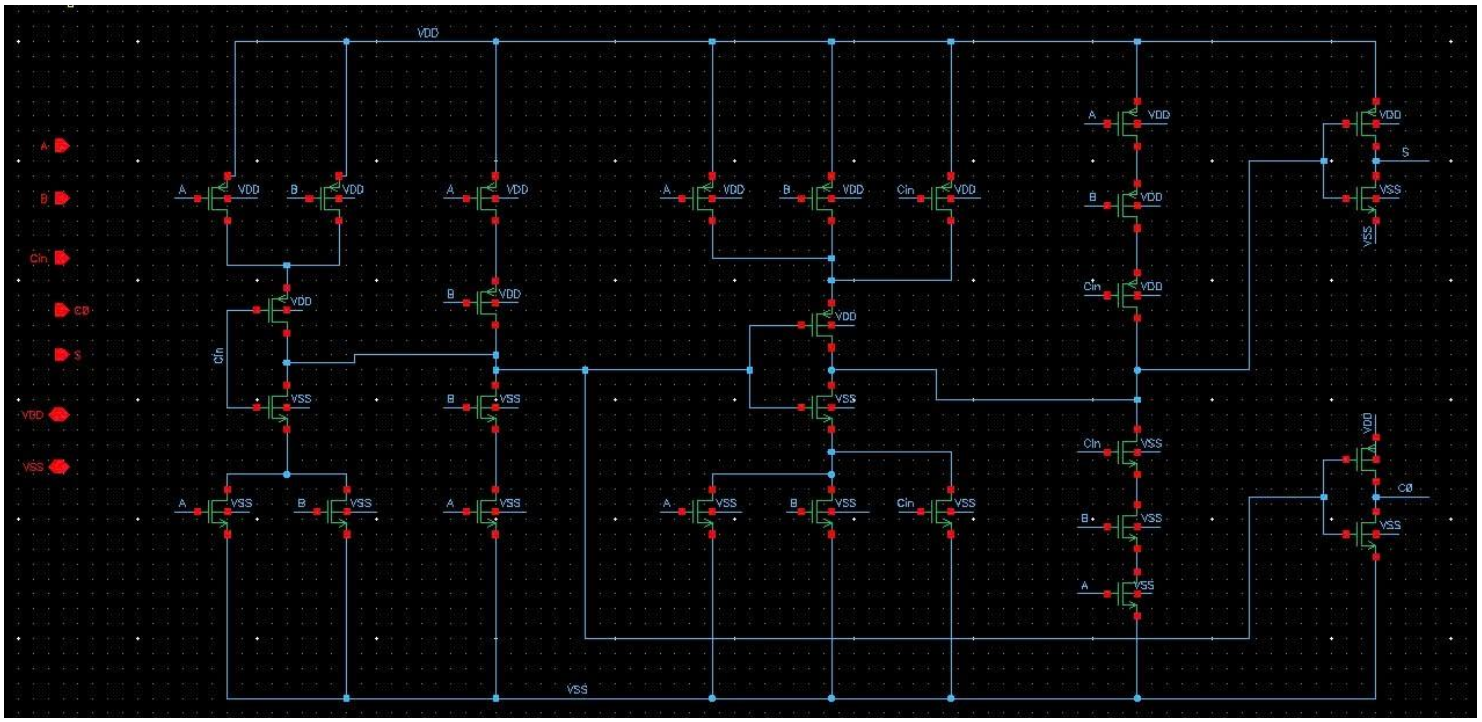

Figure: The schematic of 1-bit full adder

3. Symbol of 1-bit full adder

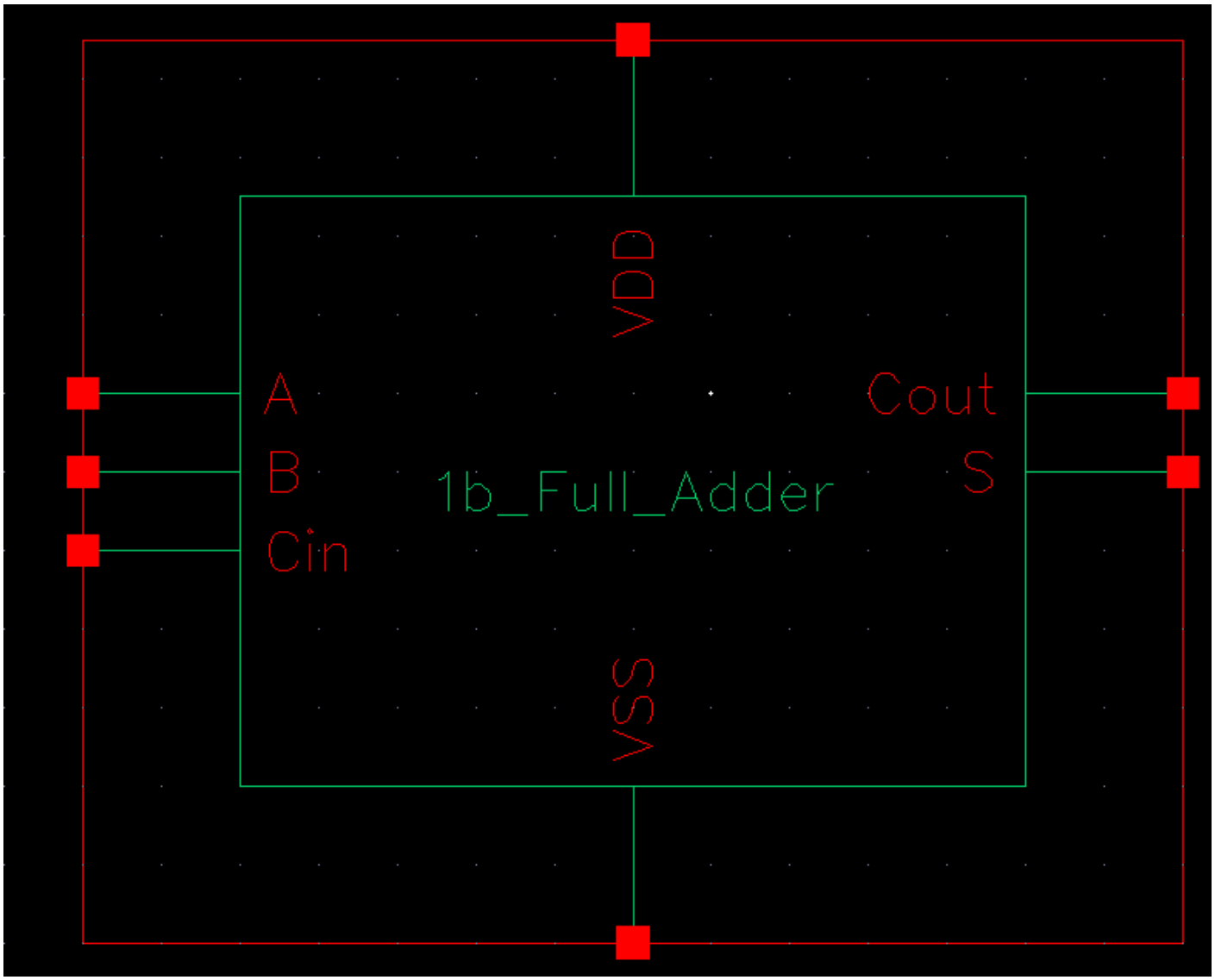

Figure: The symbol of 1-bit adder

4. Transient simulation:

Parameters	Input A	Input B	Input C
DC Voltage	0 V	0 V	0 V
Voltage 1	0 V	0 V	0 V

Parameters	Input A	Input B	Input C
Voltage 2	1 V	1 V	1 V
Delay time	0 s	0 s	0 s
Rise time	200 ps	200 ps	200 ps
Fall time	200 ps	200 ps	200 ps
Pulse width	2 µs	1 µs	0.5 µs
Period	4 µs	2 µs	1 µs

Testbench circuit for 1b_Full_Adder

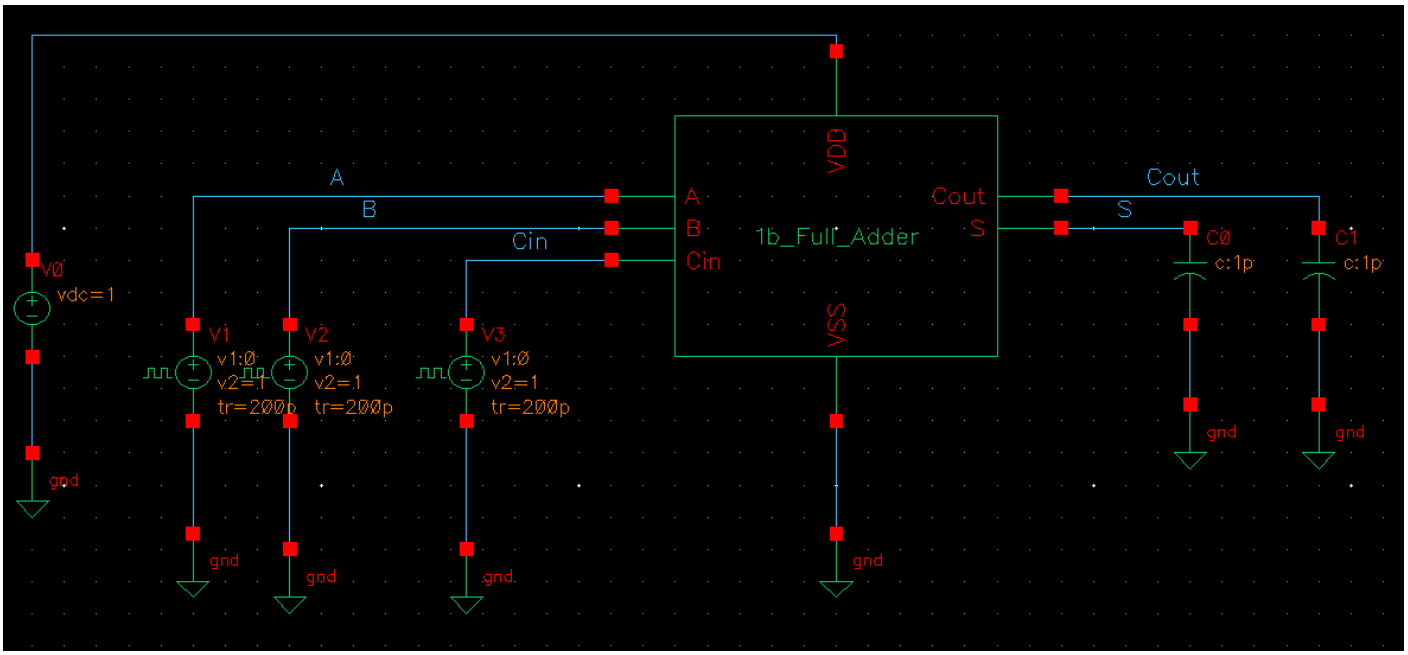

Figure: The testbench of 1 bit Full Adder

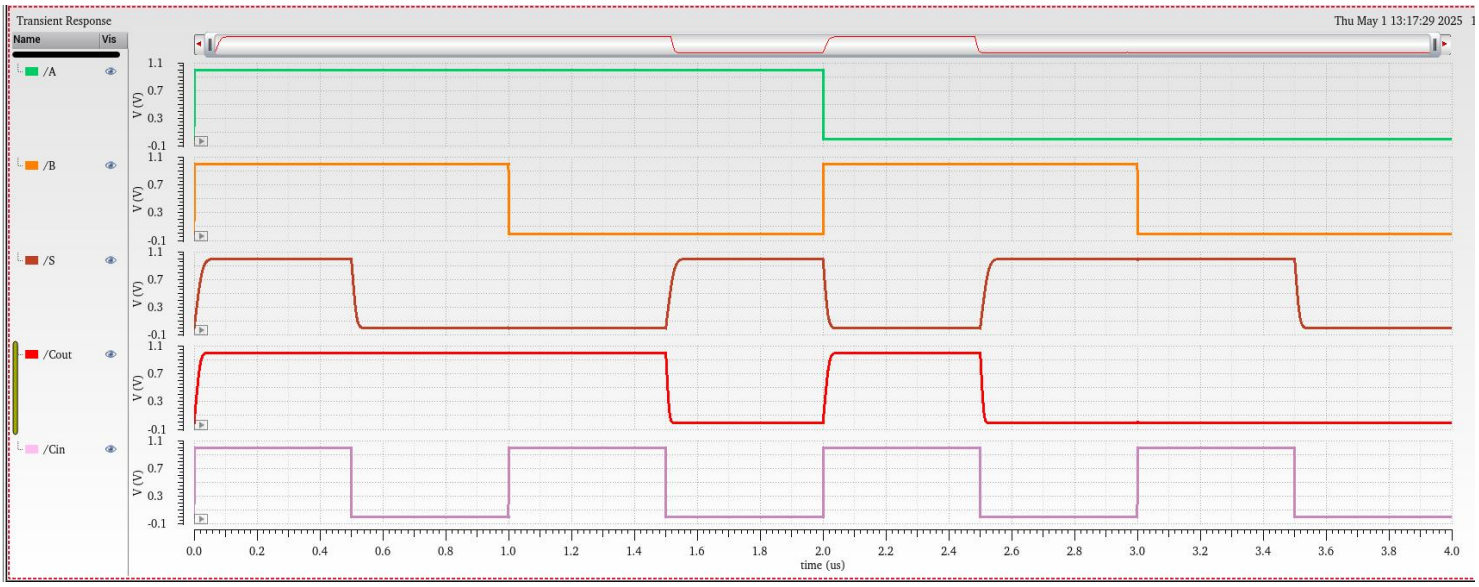

Figure : Input and output waveforms of a 1 bit Full Adder

Layout:

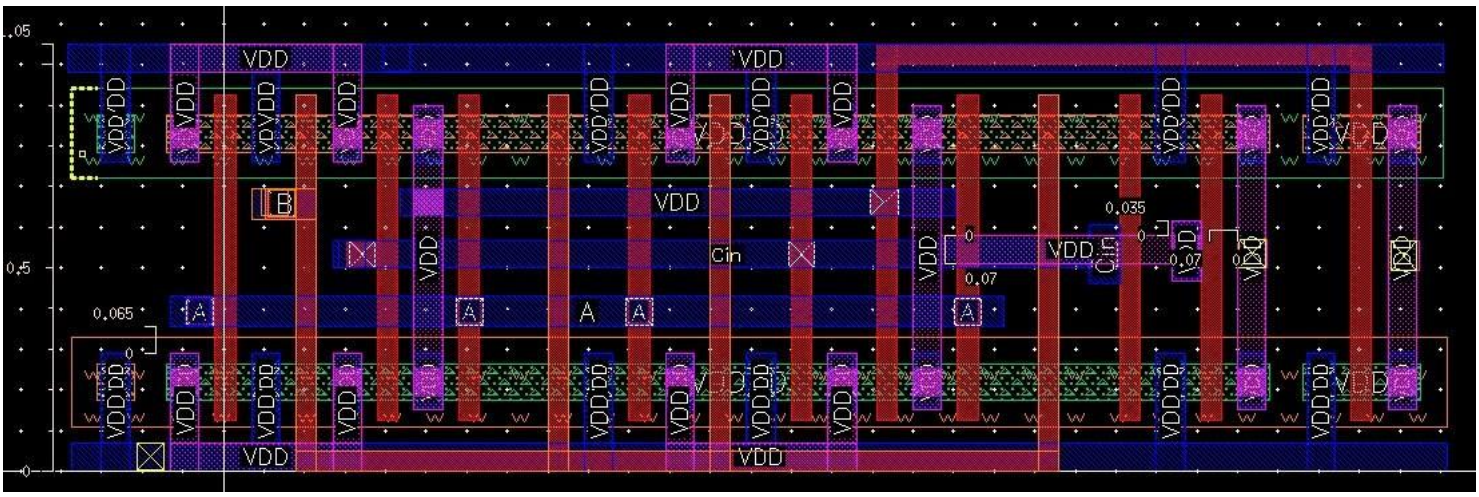

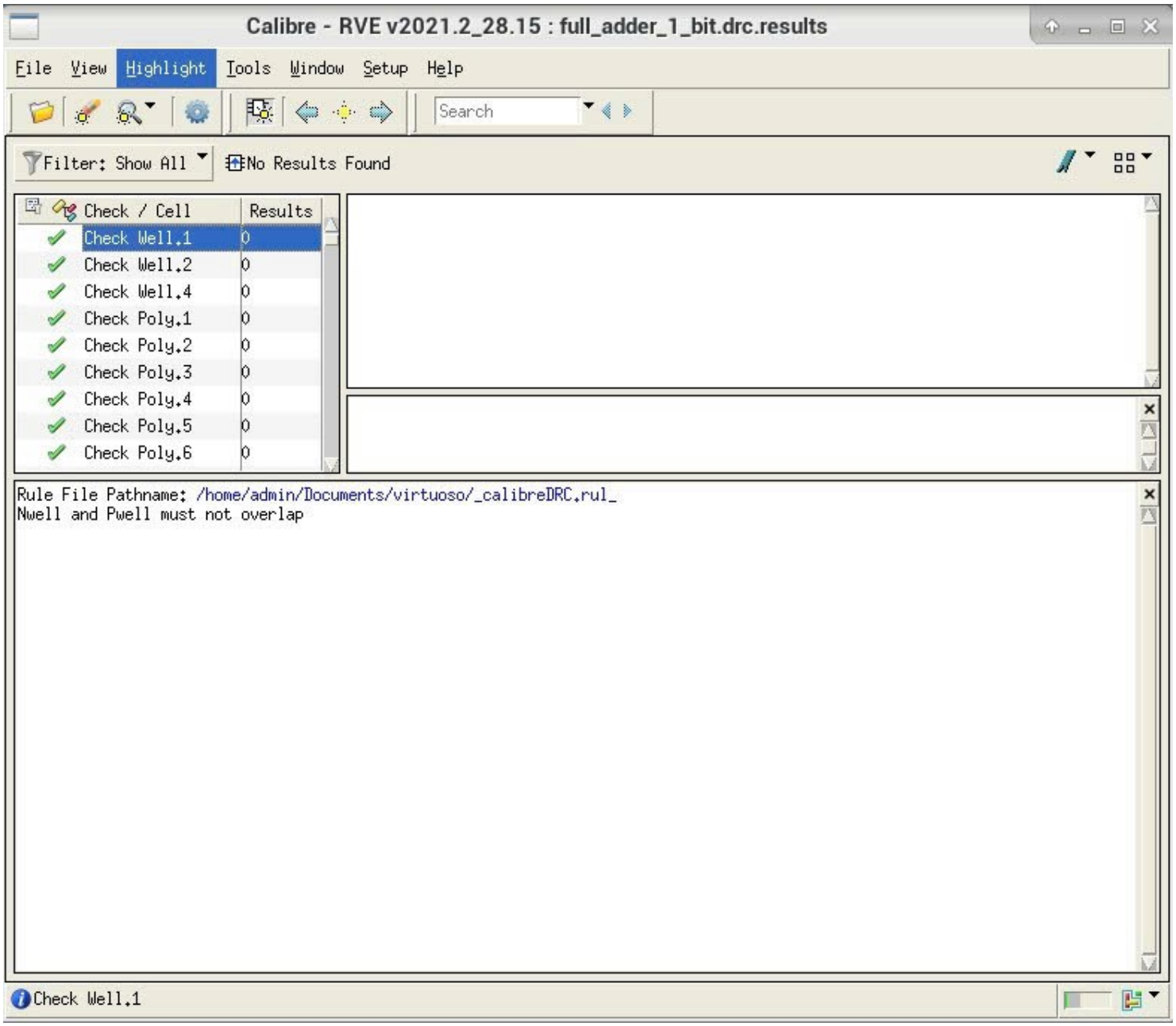
Calibre - RVE v2021.2_28.15 : full_adder_1_bit.drc.results
File View Highlight Tools Window Setup Help
Search
Filter: Show All
No Results Found
Check / Cell
Results
Check Well.1 0
Check Well.2 0
Check Well.4 0
Check Poly.1 0
Check Poly.2 0
Check Poly.3 0
Check Poly.4 0
Check Poly.5 0
Check Poly.6 0
Rule File Pathname: /home/admin/Documents/virtuoso/_calibreDRC.rul_
Nwell and Pwell must not overlap
Check Well.1

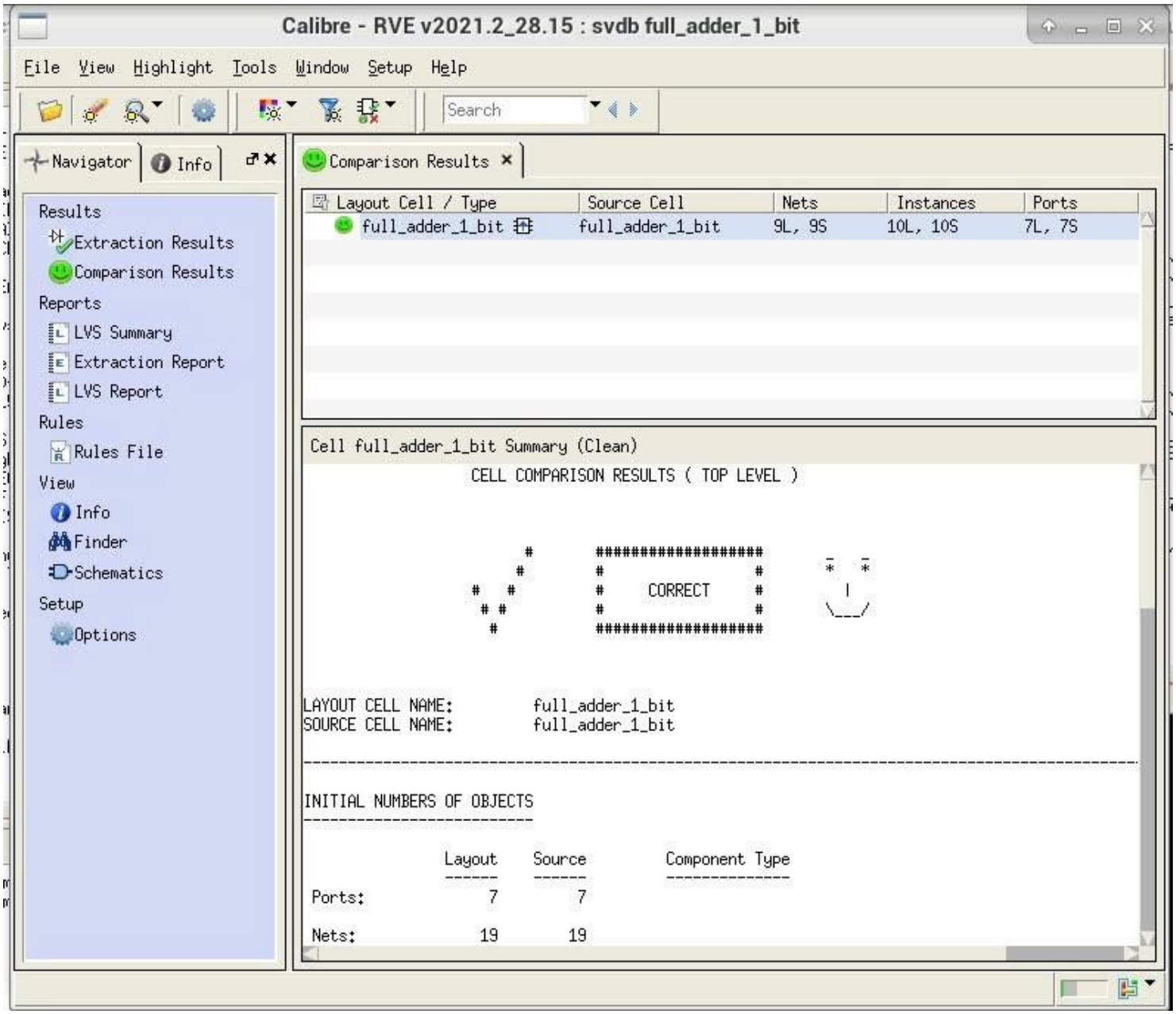
Calibre - RVE v2021.2_28.15 : svdb full_adder_1_bit
File View Highlight Tools Window Setup Help
Search
Navigator
Info
Results
Extraction Results
Comparison Results
Reports
LVS Summary
Extraction Report
LVS Report
Rules
Rules File
View
Info
Finder
Schematics
Setup
Options
Comparison Results
Layout Cell / Type
Source Cell
Nets
Instances
Ports
full_adder_1_bit
full_adder_1_bit
9L, 9S
10L, 10S
7L, 7S
Cell full_adder_1_bit Summary (Clean)
CELL COMPARISON RESULTS (TOP LEVEL)
CORRECT
LAYOUT CELL NAME: full_adder_1_bit
SOURCE CELL NAME: full_adder_1_bit
INITIAL NUMBERS OF OBJECTS
Layout Source Component Type
Ports: 7 7
Nets: 19 19