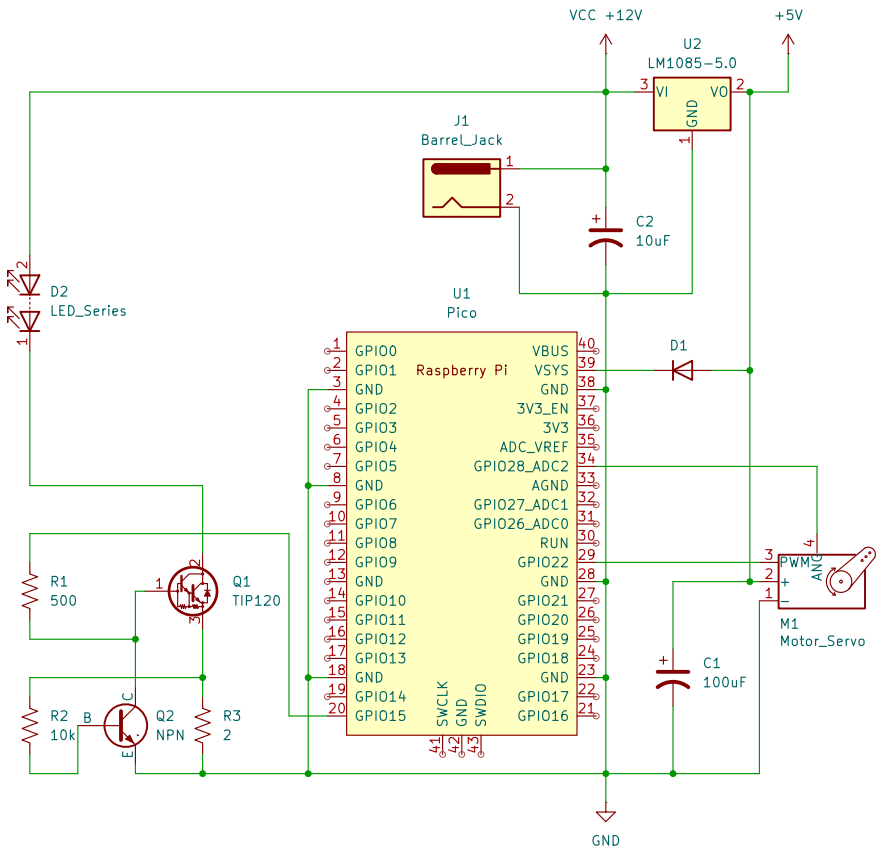

Sheet: /
File: blandpanel.kicad_sch

Title:

Size: USLetter	Date:	Rev:
KiCad E.D.A. 8.0.6		Id: 1/1