ITEM NO.	QTY.	DESCRIPTION	LENGTH
1	1	TUBE 25.40 X 3.05 MM	425.4
2	1	TUBE 25.40 X 3.05 MM	425.4
3	2	TUBE 25.40 X 3.05 MM	375.4
4	1	TUBE 25.40 X 3.05 MM	531.507
5	2	TUBE 25.40 X 3.05 MM	177.126
6	2	TUBE 25.40 X 3.05 MM	118.656
7	1	TUBE 25.40 X 3.05 MM	417.585
8	1	TUBE 25.40 X 3.05 MM	569.433
9	1	TUBE 25.40 X 3.05 MM	700
10	1	TUBE 25.40 X 3.05 MM	405.313
11	2	TUBE 25.40 X 3.05 MM	575.4
12	2	TUBE 25.40 X 3.05 MM	315.4
13	1	TUBE 25.40 X 3.05 MM	399.656
14	1	TUBE 25.40 X 3.05 MM	399.656
15	1	TUBE 25.40 X 3.05 MM	900
16	1	TUBE 25.40 X 3.05 MM	900
17	1	TUBE 25.40 X 3.05 MM	909.546
18	1	TUBE 25.40 X 3.05 MM	909.546
19	1	TUBE 25.40 X 3.05 MM	565.527
20	1	TUBE 25.40 X 3.05 MM	565.527
21	1	TUBE 25.40 X 3.05 MM	383.834
22	1	TUBE 25.40 X 3.05 MM	383.834
23	2	TUBE 25.40 X 3.05 MM	126.984
24	1	TUBE 25.40 X 3.05 MM	350
25	1	TUBE 25.40 X 3.05 MM	350
26	1	TUBE 25.40 X 3.05 MM	903.12
27	1	TUBE 25.40 X 3.05 MM	903.12
28	1	TUBE 25.40 X 3.05 MM	905.655
29	1	TUBE 25.40 X 3.05 MM	905.261
30	1	TUBE 25.40 X 3.05 MM	800
31	1	TUBE 25.40 X 3.05 MM	800
32	1	TUBE 25.40 X 3.05 MM	803.508
33	1	TUBE 25.40 X 3.05 MM	803.508
34	1	TUBE 25.40 X 3.05 MM	596.806
35	1	TUBE 25.40 X 3.05 MM	596.806
36	1	TUBE 25.40 X 3.05 MM	370.942
37	1	TUBE 25.40 X 3.05 MM	370.942
38	1	TUBE 25.40 X 3.05 MM	500.432
39	1	TUBE 25.40 X 3.05 MM	500.432
40	1	TUBE 25.40 X 3.05 MM	906.926
41	1	TUBE 25.40 X 3.05 MM	906.926
42	1	TUBE 25.40 X 3.05 MM	938.077
43	1	TUBE 25.40 X 3.05 MM	938.077
44	1	TUBE 25.40 X 3.05 MM	926.76
45	1	TUBE 25.40 X 3.05 MM	926.76
46	1	TUBE 25.40 X 3.05 MM	843.109
47	1	TUBE 25.40 X 3.05 MM	843.109
48	2	TUBE 25.40 X 3.05 MM	181.25
49	1	TUBE 25.40 X 3.05 MM	984.095
50	1	TUBE 25.40 X 3.05 MM	448.46
51	1	TUBE 25.40 X 3.05 MM	535.635
52	1	TUBE 25.40 X 3.05 MM	984.886
53	1	TUBE 25.40 X 3.05 MM	492.443
54	1	TUBE 25.40 X 3.05 MM	492.443
55	1	TUBE 25.40 X 3.05 MM	1017.657
56	1	TUBE 25.40 X 3.05 MM	589.17
57	1	TUBE 25.40 X 3.05 MM	428.487
58	1	TUBE 25.40 X 3.05 MM	1118.374
59	1	TUBE 25.40 X 3.05 MM	1118.374
60	1	TUBE 25.40 X 3.05 MM	885.112
61	1	TUBE 25.40 X 3.05 MM	2589.441

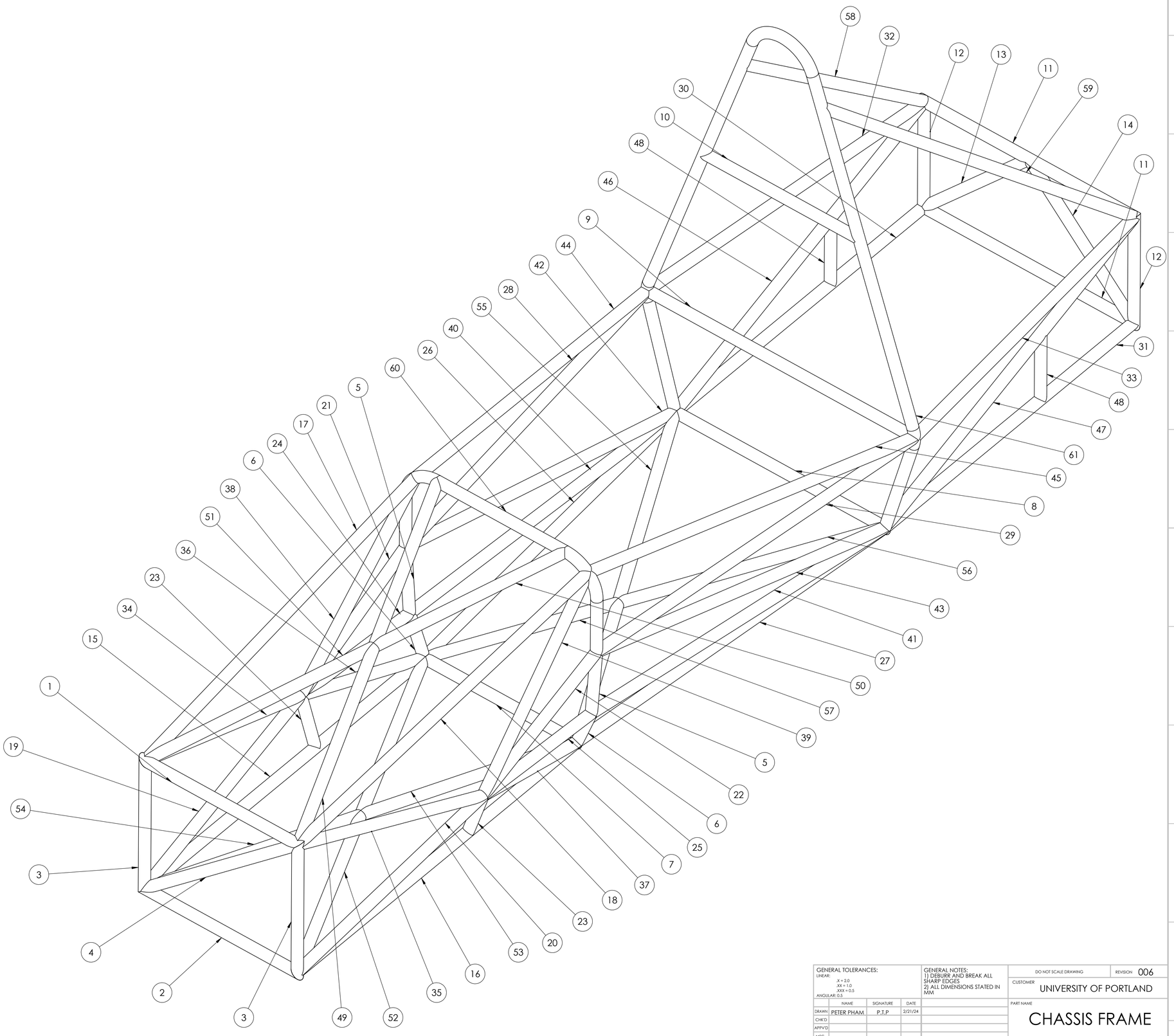

GENERAL TOLERANCES:
LINEAR: .X = 2.0, .XX = 1.0, .XXX = 0.5
ANGULAR: 0.5

GENERAL NOTES:
1) DEBURR AND BREAK ALL SHARP EDGES
2) ALL DIMENSIONS STATED IN MM

	NAME	SIGNATURE	DATE
DRAWN	PETER PHAM	P.T.P	2/21/24
CHK'D			
APPV'D			
MFG			
Q.A			

MATERIAL: 4130 N
WEIGHT: 75 KG

DO NOT SCALE DRAWING
REVISION 006
CUSTOMER: UNIVERSITY OF PORTLAND
PART NAME: CHASSIS FRAME
DWG NO. 001
A1
SCALE: 1:7.5
SHEET 1 OF 2

SOLIDWORKS Educational Product. For Instructional Use Only.

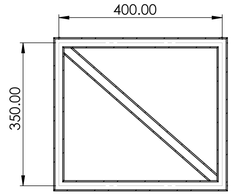

SECTION A-A
SCALE 1 : 7.5

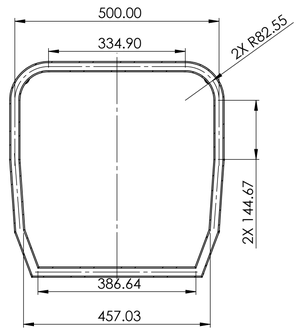

SECTION B-B
SCALE 1 : 7.5

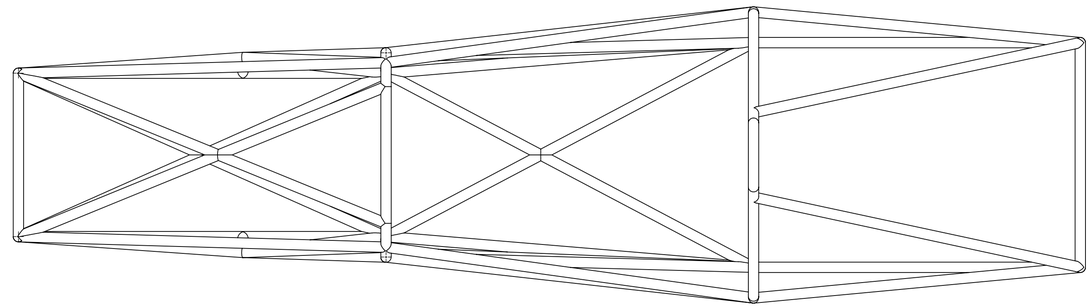

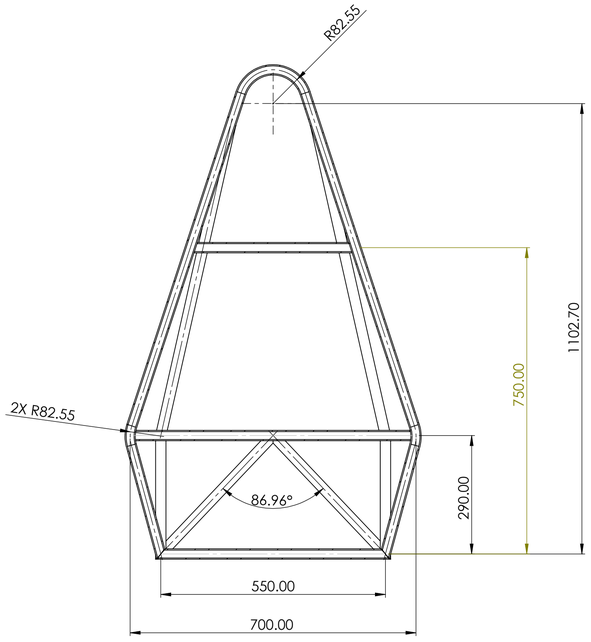

SECTION C-C
SCALE 1 : 7.5

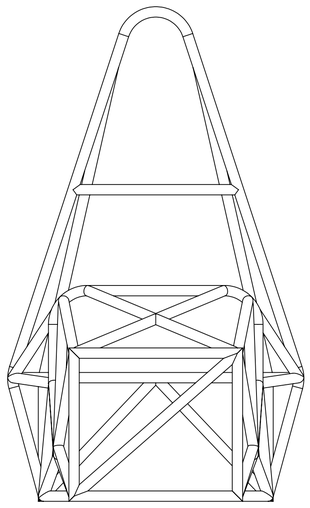

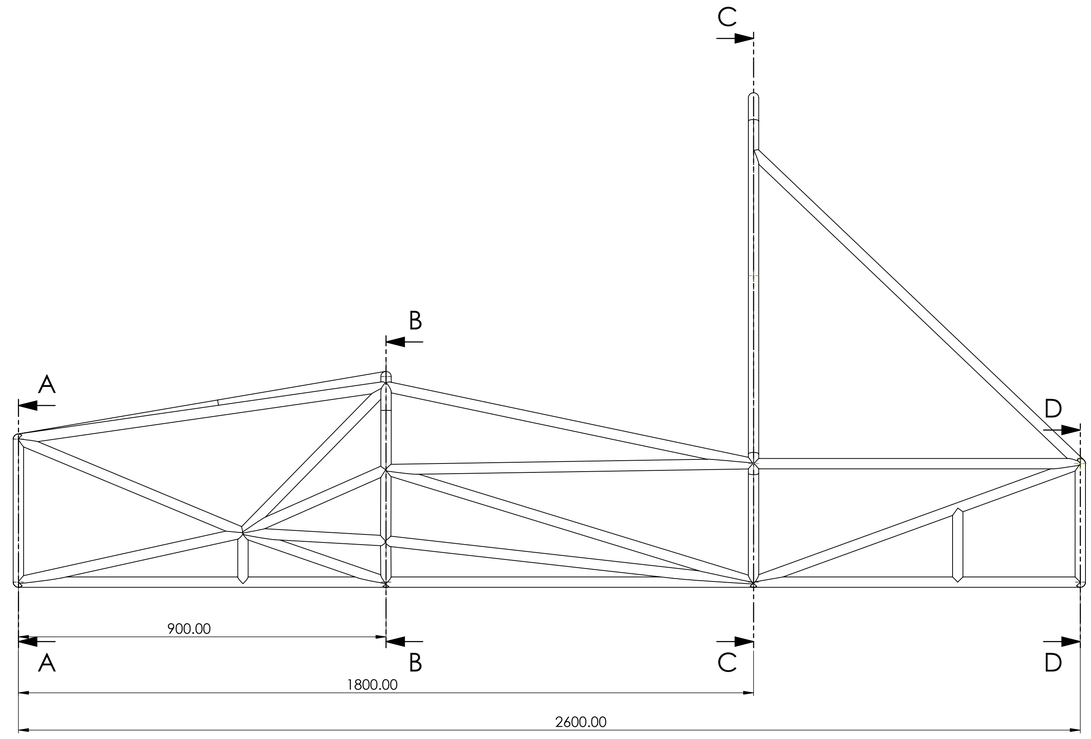

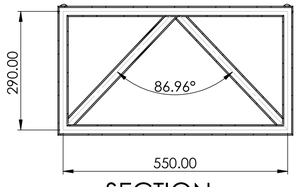

SECTION D-D
SCALE 1 : 7.5

GENERAL TOLERANCES:				GENERAL NOTES:	DO NOT SCALE DRAWING	REVISION 006
LINEAR: .X = 2.0 .XX = 1.0 .XXX = 0.5 ANGULAR: 0.5				1) DEBURR AND BREAK ALL SHARP EDGES 2) ALL DIMENSIONS STATED IN MM	CUSTOMER UNIVERSITY OF PORTLAND	
	NAME	SIGNATURE	DATE		PART NAME	
DRAWN	PETER PHAM	P.T.P	2/21/24		CHASSIS FRAME	
				MATERIAL: 4130N	DWG NO. 001	A1
				WEIGHT: 65 KG	SCALE:1:10	SHEET 2 OF 2

SOLIDWORKS Educational Product. For Instructional Use Only.