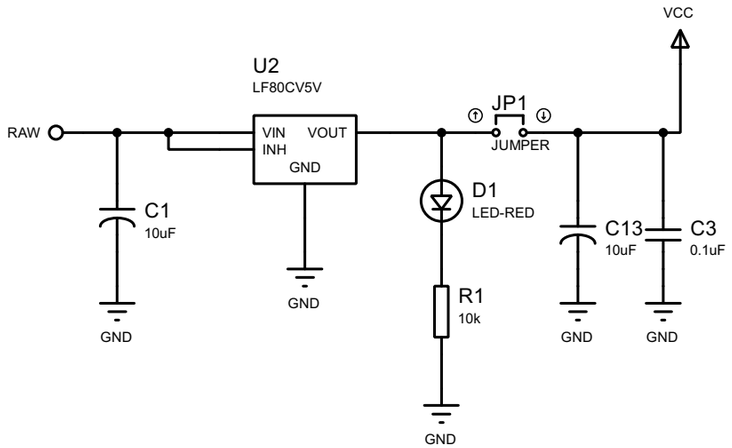

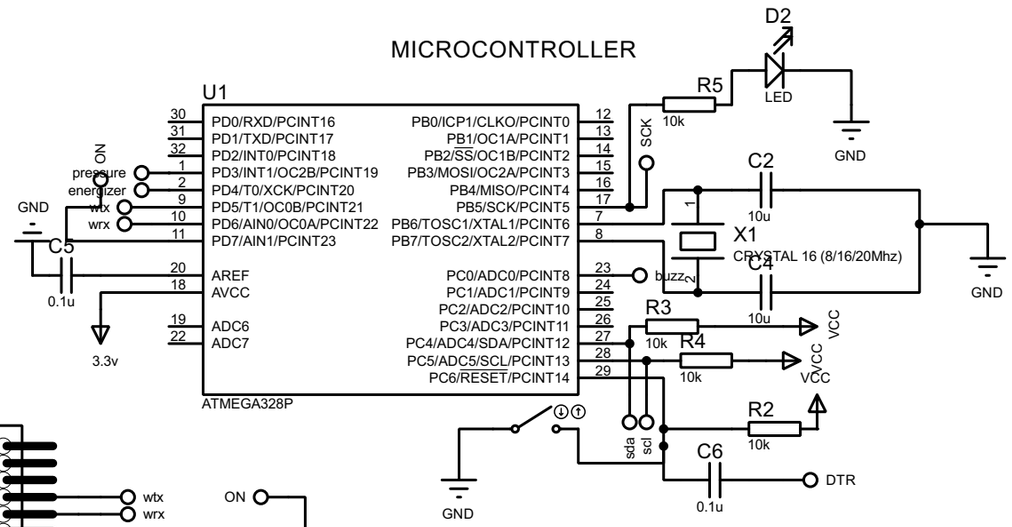

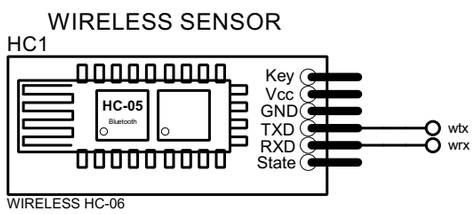

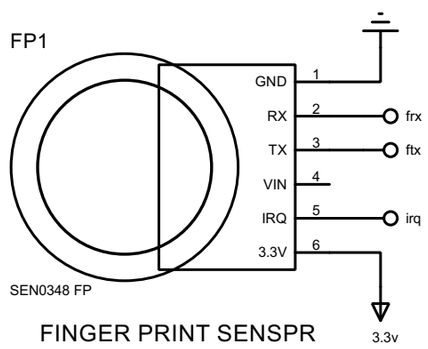

FINGER PRINT SENSPR

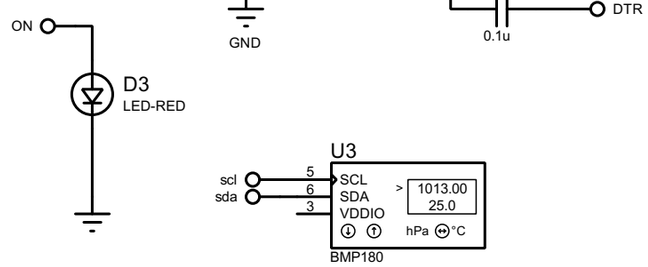

PRESSURE SENSOR

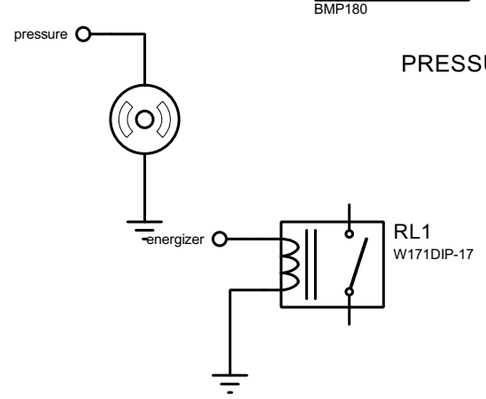

ELECTRIC MOTOR AND ELECTROMAGNETIC MAGNET

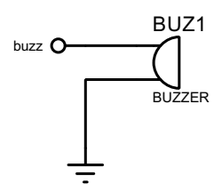

TITLE:	DATE:
DESIGN DOCUMENT PROOF OF CONCEPT DESIGN	2/22/2022
BY: @TECHY8 REV:@1.0.0REV	PAGE: 1/3