LEGAL NOTICE NO. 93

THE TRAFFIC ACT

(*Cap.* 403)

IN EXERCISE of the powers conferred by section 119 (1) of the Traffic Act, the Cabinet Secretary for Transport and Infrastructure makes the following Rules:—

THE TRAFFIC (AMENDMENT) RULES, 2013

1. These rules may be cited as the Traffic (Amendment) Rules, 2013.

1. Part I of the Twelfth Schedule to the Traffic Rules(in these Rules referred to as "the principal Rules") is amended—

(a) in paragraph 1 by inserting the following definitions in their proper alphabetical sequence—

"conventional tyre" means a tyre with a section width measuring between 280 mm and 315 mm;

"dead axle" means an axle which is not fitted and certified by the vehicle manufacturer and includes a dummy axle".

"dead man's switch" means a switch that is spring loaded and held in by the driver while the axle is in the lifted position which returns to the pavement and takes up normal loading and when the driver 's hand is released off the switch;

"liftable axles" means a non-powered axle in an axle unit, which can be lifted independently, but which, by virtue of an automatic mechanism or sensor, is lowered to the road pavement when the adjacent axle in the unit is loaded beyond an automatically pre-determined load limit;

"super single tyre" means a tyre with a section width equal to or greater than 385 mm;

(b) in paragraph 2—

(i) by deleting subparagraph (1) and substituting therefor the following new sub- paragraph—

(1) The maximum weight which may be transmitted to the road in the case of a vehicle fitted with pneumatic tyres, whethr laden or unladen , shall not exceed—

"(a) by way of any single steering axle whether controlled by drawbar or driver operated steering mechanism ... ... 8,000 kg.

(b) by way of any single axle having four or more wheels fitted with conventional tyres .... 10,500 kg.

(c) by way of any single axle having two wheels fitted with super single tyres .... 8,500 kg.

(d) by way of any driver operated double steering axles having two wheels fitted with conventional tyres ... 12,000 kg.

(e) by way of any drawbar controlled double steering axles having four wheels fitted with conventional tyres ... 16,000 kg.

(f) by way of any tandem axle group each having two wheels fited with Super single tyres ..... 16,000 kg.

(g) by way of any tandem axle group each having four wheels fitted with conventional tyres ..... 18,000 kg.

(h) by way of any triple axle group each having two wheels fitted with Super single tyres ... . 22,500 kg.

(i) by way of a triple axle group each having four wheels fitted with conventional tyres ... ... 24,000 kg.

Provided that in the case of any axle or axle group (excluding a single steering axle) where one or more of the axles is having only two wheels fitted with conventional tyres, the appropriate maximum allowable load figure given in this subparagraph shall be reduced by twenty-five per cent.

(ii) by deleting subparagraph (2) and substituting therefor the following new subparagraph–

"(a) vehicle with two axles ... ... 18,000 kg.

(b) vehicle with three axles ... ... 26,000 kg.

(c) vehicle and semi-trailer with a total of three axles ... 28,000 kg.

(d) vehicle with four axles ... ... 30,000 kg.

(e) vehicle and semi-trailer with a total of four axles 36,000 kg.

(f) vehicle and draw bar trailer with a total of 4 axles ... ...36,000 kg.

(g) vehicle and semi-trailer with a total of five axles ... ... 44,000 kg.

(h) vehicle and draw bar trailer with a total of five axles ... ... 44,000 kg.

(i) vehicle and semi-trailer with a total of six axles ... 50,000 kg.

(j) vehicle and draw bar trailer with a total of six axles ... ... 52,000 kg.

(iii) by adding the following new subparagraphs immediately after subparagraph (9)—

"(10) A tolerance of 5% shall be allowed on the permissible maximum axle loads on an axle or axle group. No tolerance shall be allowed on the maximum permissible gross vehicle weights.

(11) A vehicle with liftable axles shall be fitted with the manufacture's certified dead man's switch and must have an automatic drop-down mechanism when loaded.

(12) A person shall not operate a vehicle on a public road with dummy or dead axle, defective suspension or dead man's switch or other mechanisms in the vehicle that affects the weight transmitted to the road pavement.

(13) No axle in the tandem or triple axle group shall exceed the permissible maximum single axle load limits.

(14) The conventional tyres and the respective inflation pressure that match the recommended axle load limits shall be the following—

(a) A 1100x20, which is an 11-inch (280 mm) wide cross-ply tyre, fitted to a 20-inch diameter wheel rim and inflated at a pressure of 750 kPa (7.5 bars); or,

(b) A 12R 22.5, which is a 12-inch (305 mm) wide radial-ply on a 22.5-inch diameter wheel rim and inflated at a pressure of 800 kPa (8.0 bars); or,

(c) A 315/80R22.5, wide tyre inflated at a pressure of 800kPa or 8.0 bars."

(c) in paragraph 3 (b)—

(i) deleting the expression "4.2" appearing in sub paragraph (b) and substituting therefor the expression "4.3".

(ii) deleting the expression "11" appearing in sub paragraph(e)(i) and substituting therefor the expression "12.5".

3. The principle Rules are amended by deleting Part II of the Twelfth Schedule and substituting therefor the following new part—

PART II—VEHICLE AXLE CONFIGURATION

Diagram 1: Rigid body vehicle with 2 Axles [paragraph 2 (2) (a)]

(i)

Wheel Configuration 2:4

Maximum Gross Vehicle Weight = 18,000 Kg.

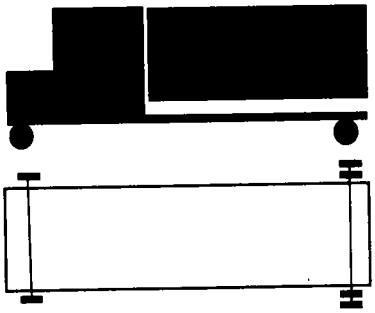

Diagram 2: Rigid body vehicle with 3 Axles [paragraph 2 (2) (b)]

(ii)

Wheel Configuration 2:4:4

Maximum Gross Vehicle Weight = 26,000 Kg.

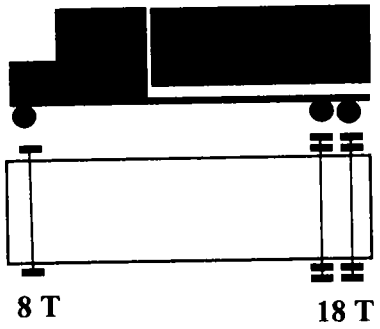

Diagram 3. Vehicle and semi-trailer with 3 Axles [paragraph 2 (2) (c)]

(iii)

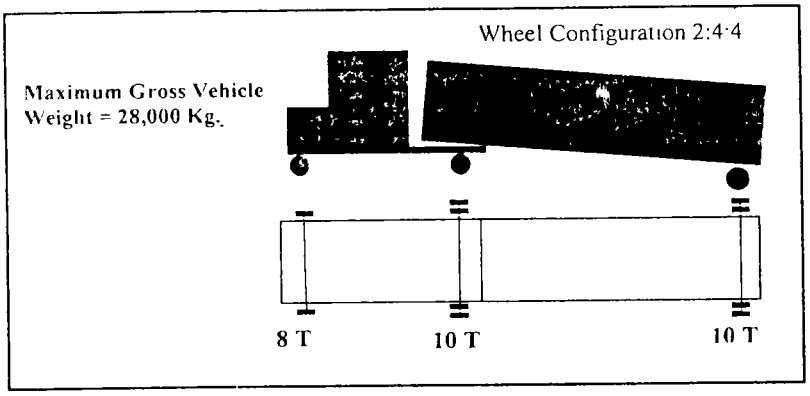

Diagram 4. Rigid body vehicle with 4 Axles [paragraph 2 (2) (d)]

(iv)

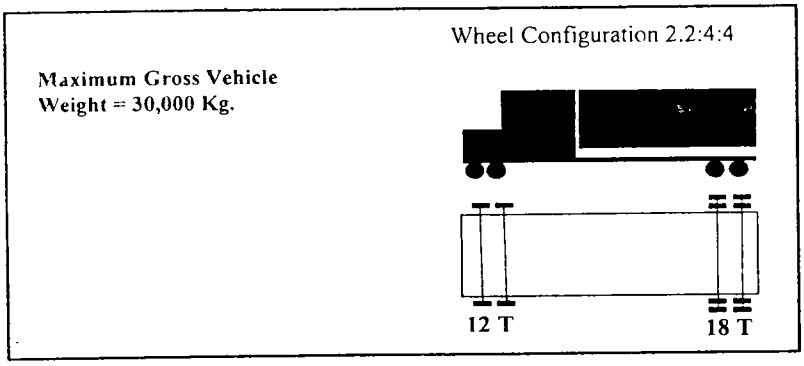

Diagram 5: Vehicle and semi-trailer with 4 Axles [paragraph 2 (2) (e)]

(v)

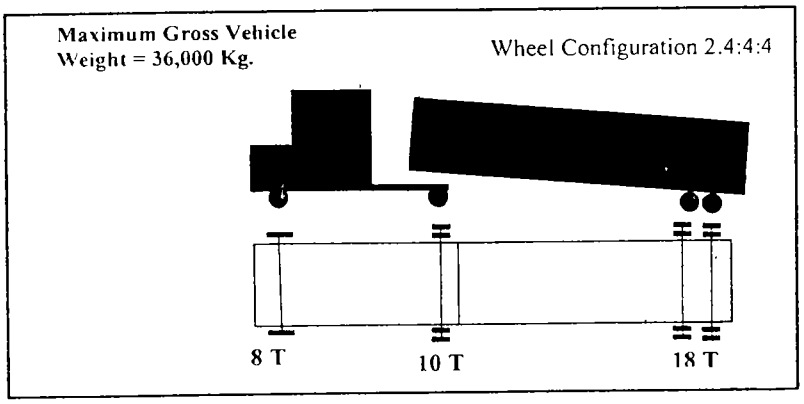

Diagram 6 Vehicle and drawbar trailer with 4 Axles [paragraph 2 (2) (f)]

(vi)

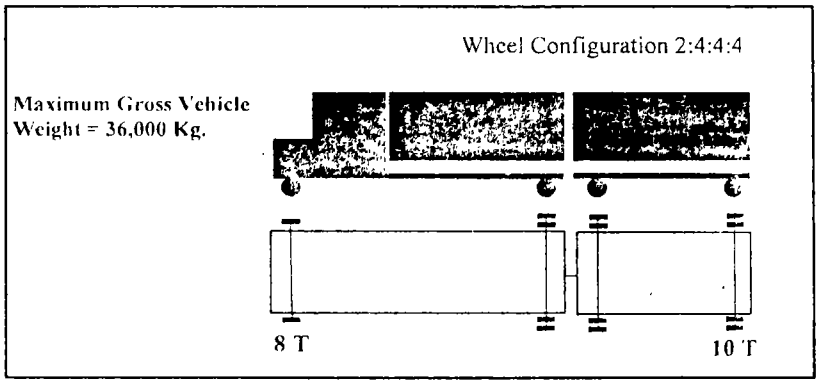

Diagram 7: Vehicle and semi-trailer with 5 Axles [paragraph 2 (2) (g)]

(vii)

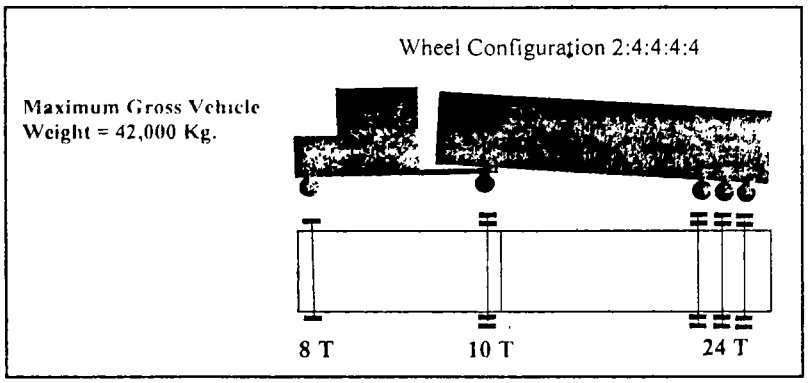

Diagram 8: Vehicle and semi-trailer with 5 Axles [paragraph 2 (2) (g)]

(viii)

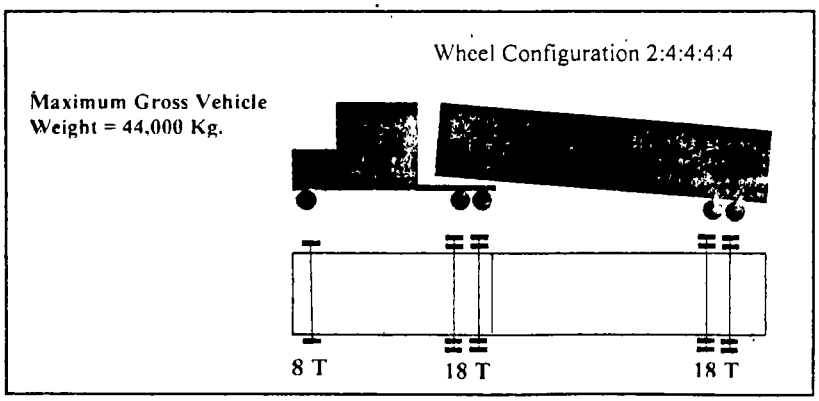

Diagram 9 Vehicle and drawbar trailer with 5 Axles [paragraph 2 (2) (h)]

(IX)

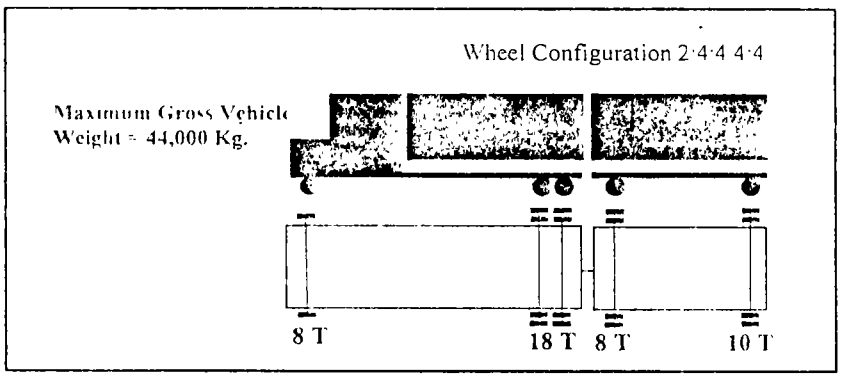

Diagram 10 Vehicle and semi-trailer with 6 Axles [Super Single Tyres]

(X)

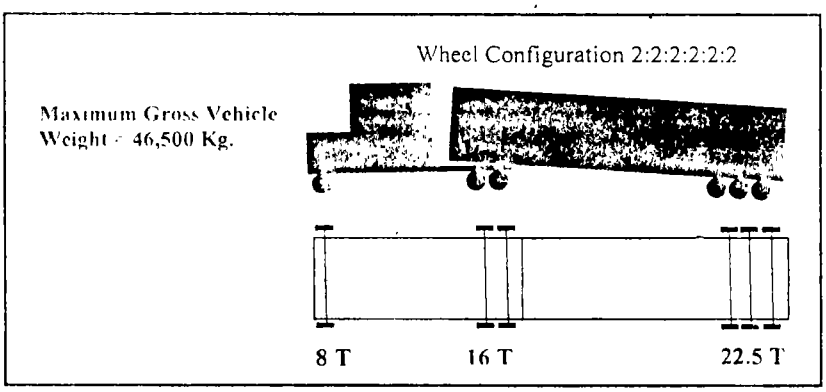

Diagram 11 Vehicle and semi-trailer with 6 Axles

(XI)

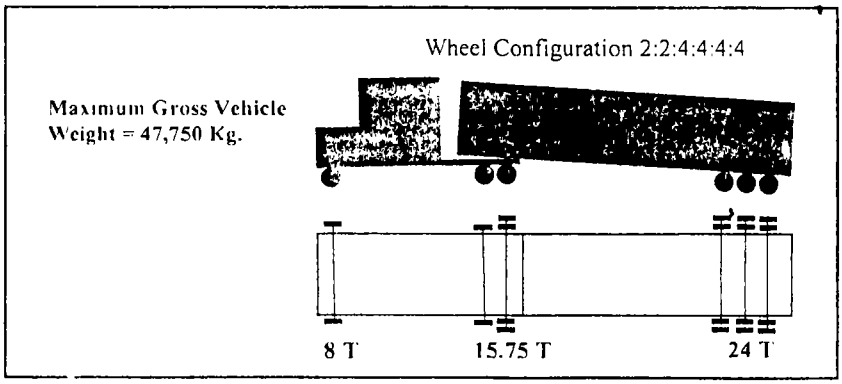

Diagram 12: Vehicle and semi-trailer with 6 Axles [paragraph 2 (2) (i)]

(xii)

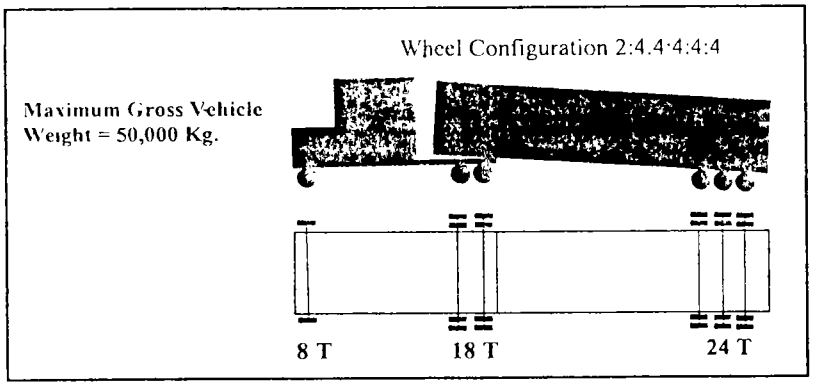

Diagram 13: Vehicle and drawbar trailer with 6 Axles [paragraph 2 (2) (j)]

(xiii)

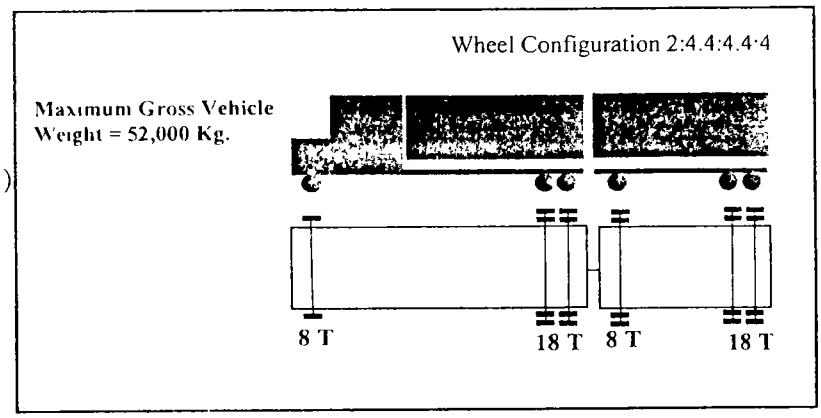

Dated the 13th June, 2013.

M. S. M. KAMAU,
Cabinet Secretary for Transport and Infrastructure.

LEGAL NOTICE NO. 94

THE SCIENCE, TECHNOLOGY AND INNOVATION ACT

(*No.* 28 *of* 2013)

COMMENCEMENT

IN EXERCISE of the powers conferred by section 1 of the Science, Technology and Innovation Act, 2013, the Cabinet Secretary for Education, Science and Technology appoints the 24th June, 2013, as the date on which all the provision of the Act other than Parts VI and VII shall come into operation.

Dated the 27th May, 2013.

J. T. KAIMENYI,
Cabinet Secretary for Education, Science and Technology.

LEGAL NOTICE NO. 95

THE TECHNICAL AND VOCATIONAL EDUCATION AND TRAINING ACT

(*No.* 29 *of* 2013)

COMMENCEMENT

IN EXERCISE of the powers conferred by section 1 of the Technical and Vocational Education and Training Act, 2013, the Cabinet Secretary for Education, Science and Technology appoints the 24th June, 2013, as the date on which all the provision of the Act other than Parts VIII and IX shall come into operation.

Dated the 29th May, 2013.

J. T. KAIMENYI,
Cabinet Secretary for Education, Science and Technology.

LEGAL NOTICE NO. 96

THE BANKING ACT

(*Cap.* 488)

EXEMPTION

IN EXERCISE of the powers conferred by section 53 of the Banking Act, 2013, the Cabinet Secretary for the National Treasury exempts Gulf Africa Bank Limited from the provisions of section 12 (a) and 12 (c) for a period of five (5) years with effect from the 1st December, 2012.

Dated the 29th May, 2013.

H. K. ROTICH,
Cabinet Secretary for the National Treasury.

LEGAL NOTICE NO. 97

THE BANKING ACT

(*Cap.* 488)

EXEMPTION

IN EXERCISE of the powers conferred by section 53 of the Banking Act, 2013, the Cabinet Secretary for the National Treasury exempts Barclays Africa Limited, Barclays Africa Group Holdings Limited and Absa Group Limited from the provisions of section 13 (1) of the Act, for a period of five years with effect from the 1st April, 2013, in connection with the acquisition and direct or indirect holding or ordinary shares in Barclays Bank of Kenya Limited.

Dated the 24th May, 2013.

H. K. ROTICH,
Cabinet Secretary for the National Treasury.

LEGAL NOTICE NO. 98

THE CATTLE CLEANSING ACT

(*Cap.* 358)

AMENDMENT

IN EXERCISE of the powers conferred by section 2 of the Cattle Cleansing Act, the Director of Veterinary amends the Prescription of Effective Tick Destroying Agents contained in Legal Notice No. 60 of 2009 by deleting the word "ASSIATIX" appearing in paragraph 2 of the Schedule and substituting therefore the word "BIMATIX".

Dated the 3rd June, 2013.

P. M. ITHONDEKA,
Director of Veterinary Services.

LEGAL NOTICE NO. 99

THE NATIONAL HOSPITAL INSURANCE FUND ACT, 1998

(*No.* 9 *of* 1998)

DECLARATION OF HOSPITALS

IN EXERCISE of the powers conferred by Section 30 (1) of the National Hospital Insurance Fund Act, 1998, the National Hospital Insurance Fund Board of Management, in consultation with the Cabinet Secretary for Health and the chairman of the Medical Practitioners and Dentists Board declares the following to be hospitals for purposes of the Act:

Declared Hospitals

Navakholo Sub-District Hospital
St. Joseph Shelter of Hope Health Centre
The Hope Medical Centre, Awasi
Kitengela Medical Services, Kajiado
St. Luke's Orthopaedics and Trauma Hospital
Masaba Hospital
Nzoia Medical Centre
Pablo Hortsmann Paediatric Health Centre
Watamu Nursing Home

SIMEON OLE KIRGOTTY,
Chief Executive Officer,
National Hospital Insurance Fund.

J. A. ALUOCH,
Chairman,
National Hospital Insurance Fund.

LEGAL NOTICE NO. 100

THE NATIONAL HOSPITAL INSURANCE FUND ACT, 1998

(*No.* 9 *of* 1998)

DECLARATION OF HOSPITALS

IN EXERCISE of the powers conferred by Section 30 (1) of the National Hospital Insurance Fund Act, 1998, the National Hospital Insurance Fund Board of Management, in consultation with the Cabinet Secretary for Health and the chairman of the Medical Practitioners and Dentists Board declares the following to be hospitals for purposes of the Act:

Declared Hospitals

Likuyani Sub-District Hospital
Port Florence Community Hospital-Homabay
Entasopia Health Centre
Kimana Health Centre
Immurtot Health Centre
Ongata Rongai Health Centre alias Saitoti
Kongoni Health Centre
Entara Health Centre
Lunga Lunga Health Centre
Ladopharma Medical Centre
Loco Health Centre
Karen Health Centre
Matibabu Foundation Hospital
Mghange Nyika Health Centre
Bikeke Health Centre
St. Luke's Orthopedic Hospital
Declared Hospitals

Kacheliba District Hospital
Chepareria Sub-district Hospital
Sigor Sub-District Hospital
Kabichbich Health Centre
Serewo Health Centre
Keringet Health Centre
Lomut Dispensary

SIMEON OLE KIRGOTTY,
Chief Executive Officer,
National Hospital Insurance Fund.

J. A. ALUOCH,
Chairman,
National Hospital Insurance Fund.

LEGAL NOTICE NO. 101

THE NATIONAL HOSPITAL INSURANCE FUND ACT, 1998

(*No.* 9 *of* 1998)

APPROVAL OF REBATES

IN EXERCISE of the powers conferred by section 27 of the National Hospital Insurance Fund Act, 1998, the National Hospital Insurance Fund Board of Management, in consultation with the Cabinet Secretary for Health has approved the rebates for the following hospital for purposes of the Act.

Name of Hospital	*Address*	*Town/District*	*Rebate KSh.*	*Contract*
Navakholo Sub-District Hospital	940-50100	Kakamega	1,300	A
St. Joseph Shelter of Hope Health Centre	286-80300	Voi	1,400	B
The Hope Medical Centre- Awasi	117	Awasi	1,300	B
Kitengela Medical Services-Kajiado	352-00242	Kitengela	1,400	B
St. Luke's Orthopaedics and Trauma Hospital	3705-3100	Eldoret	1,400	C
Masaba Hospital	269	Maseno	1,600	B
Nzoia Medical Centre	304-532	Bungoma	1,300	B
Pablo Hortsmann Paediatric Health Centre	249	Lamu	1,400	B
Watamu Nursing Home	322	Watamu	1,200	C

SIMEON OLE KIRGOTTY,
Chief Executive Officer,
National Hospital Insurance Fund.

J. A. ALUOCH,
Chairman,
National Hospital Insurance Fund.

PRINTED AND PUBLISHED BY THE GOVERNMENT PRINTER, NAIROBI