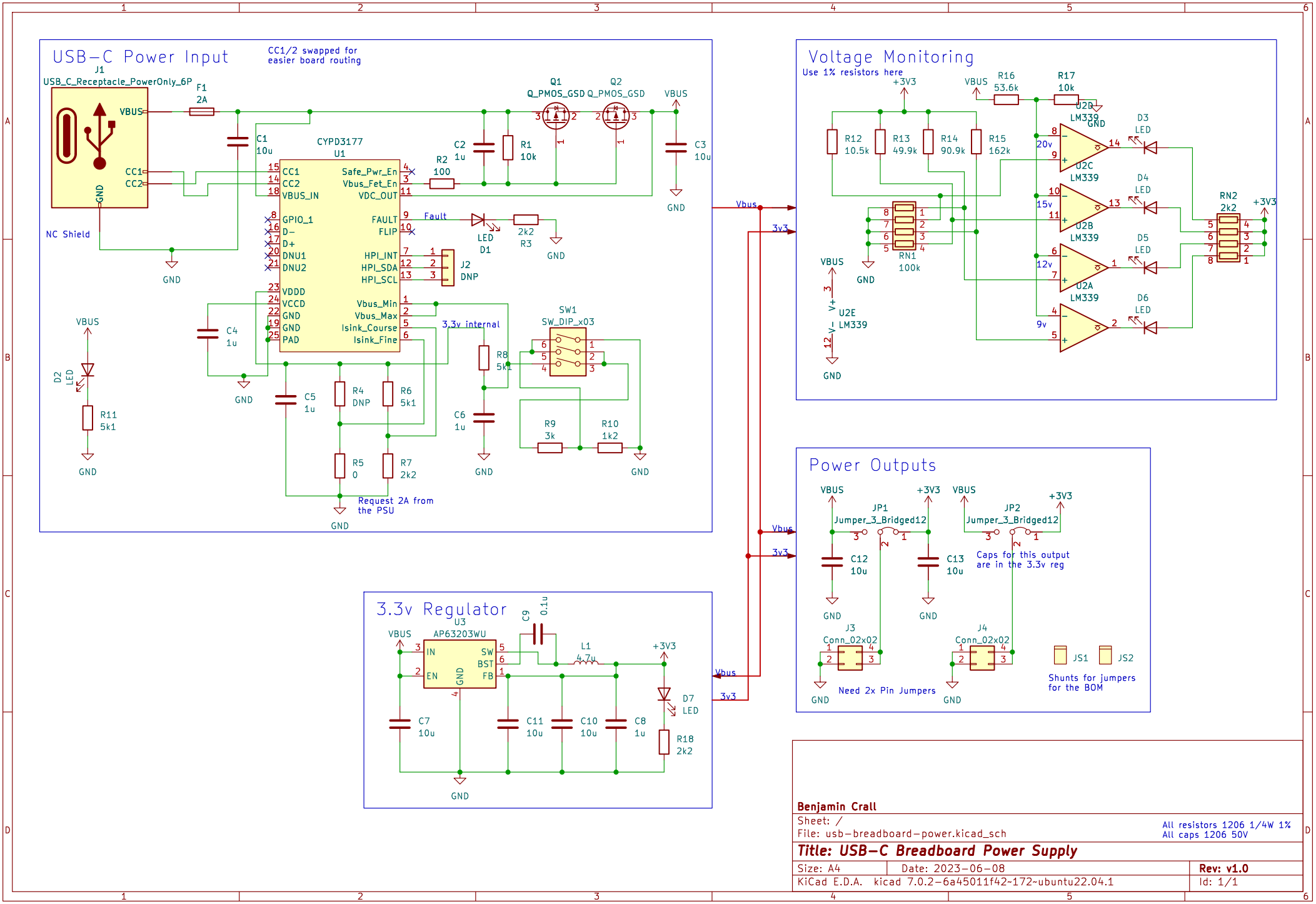

Benjamin Crall

Sheet: /

File: usb-breadboard-power.kicad_sch

All resistors 1206 1/4W 1%
All caps 1206 50V

Title: USB-C Breadboard Power Supply

Size: A4	Date: 2023-06-08	Rev: v1.0
KiCad E.D.A. kicad 7.0.2-6a45011f42~172~ubuntu22.04.1		Id: 1/1