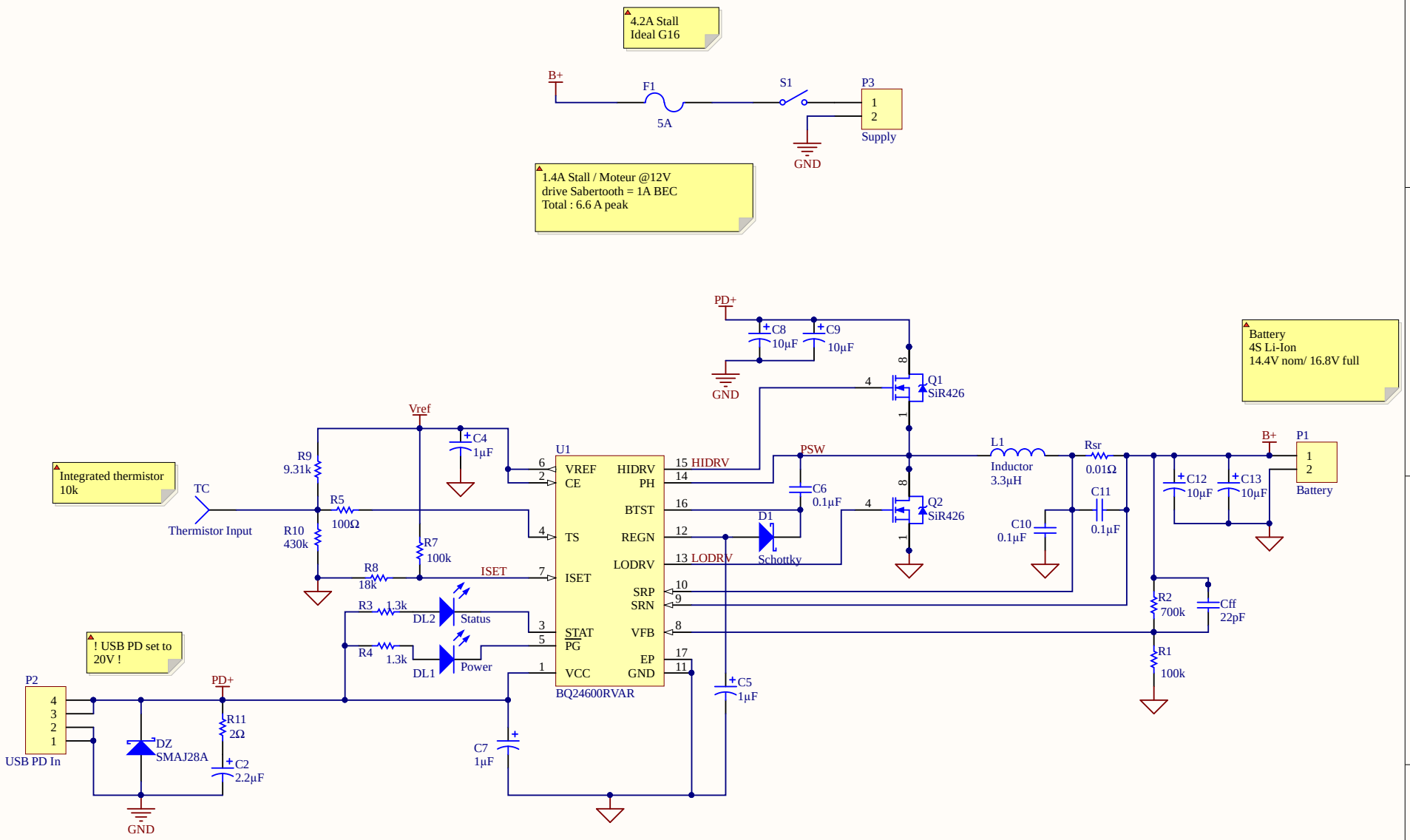

Title	***Rover USB PD3 Charger***		UQAC Université du Québec à Chicoutimi
Revision: 1.0	Size: Letter	Number: 1	
	Date: 09/2020	Sheet 1 of 1	
File: Rover - USB PD3 Charger.SchDoc		Drawn By: Francis Deschênes	