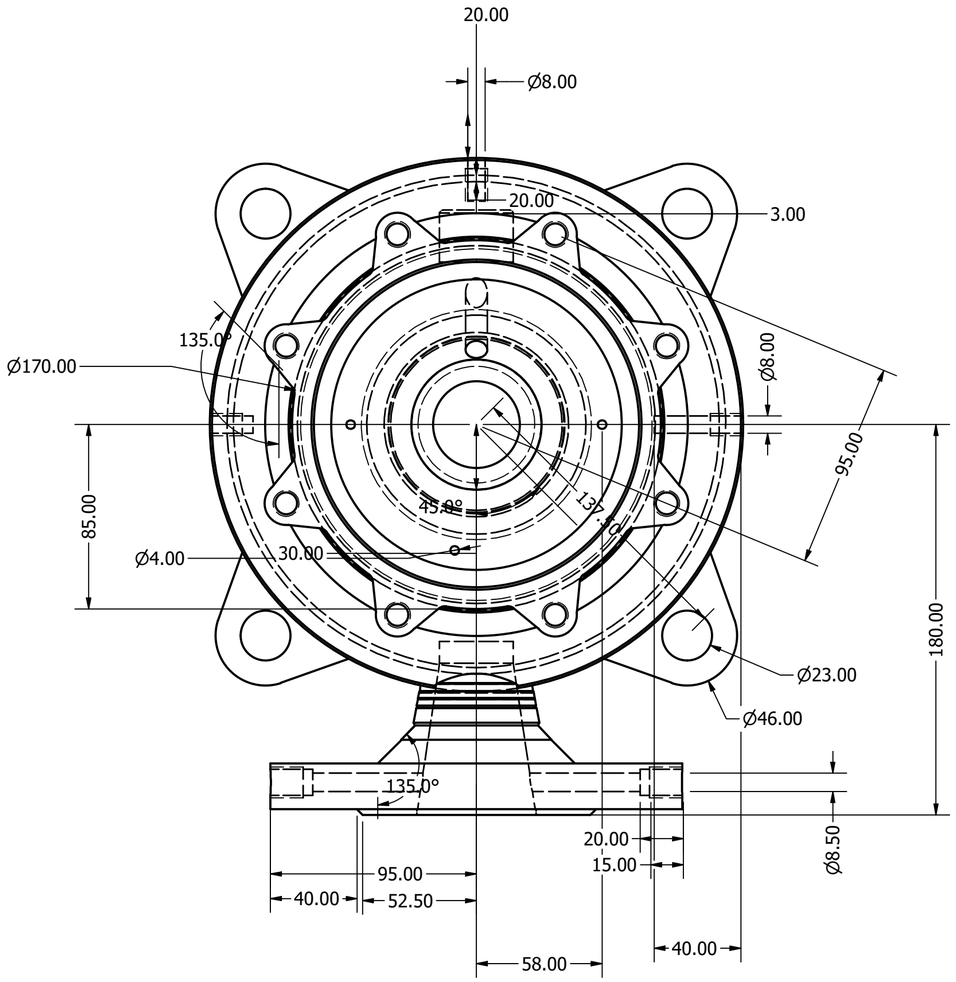

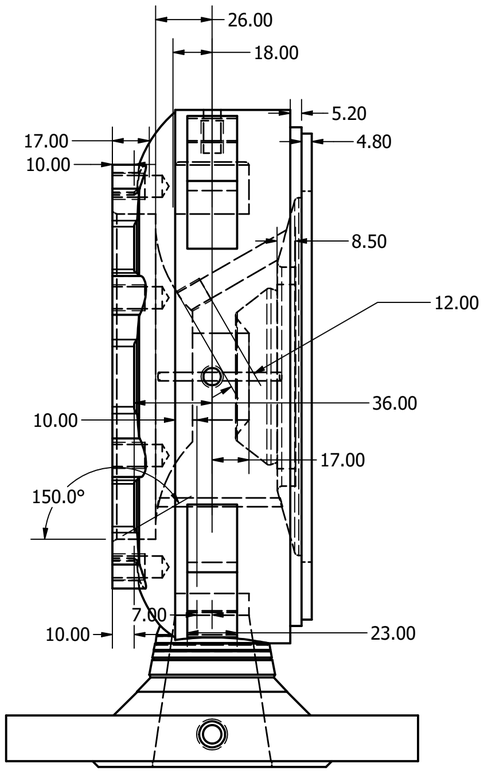

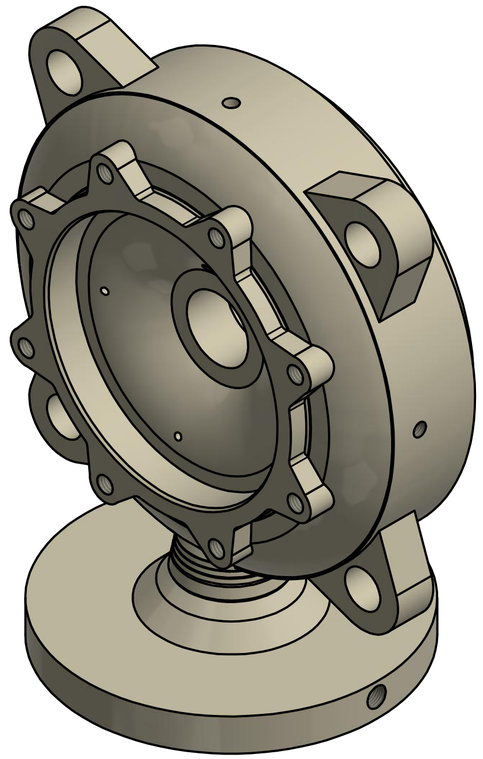

DRAWN BENNY S L	09/08/2020	VERZEO PROJECT HEV
CHECKED		TITLE
QA		SUCTION CASTING MACHINE
MFG		
APPROVED		SIZE A2 / DWG NO Drawing1 / REV
		SCALE 1:1 / SHEET 1 OF 1