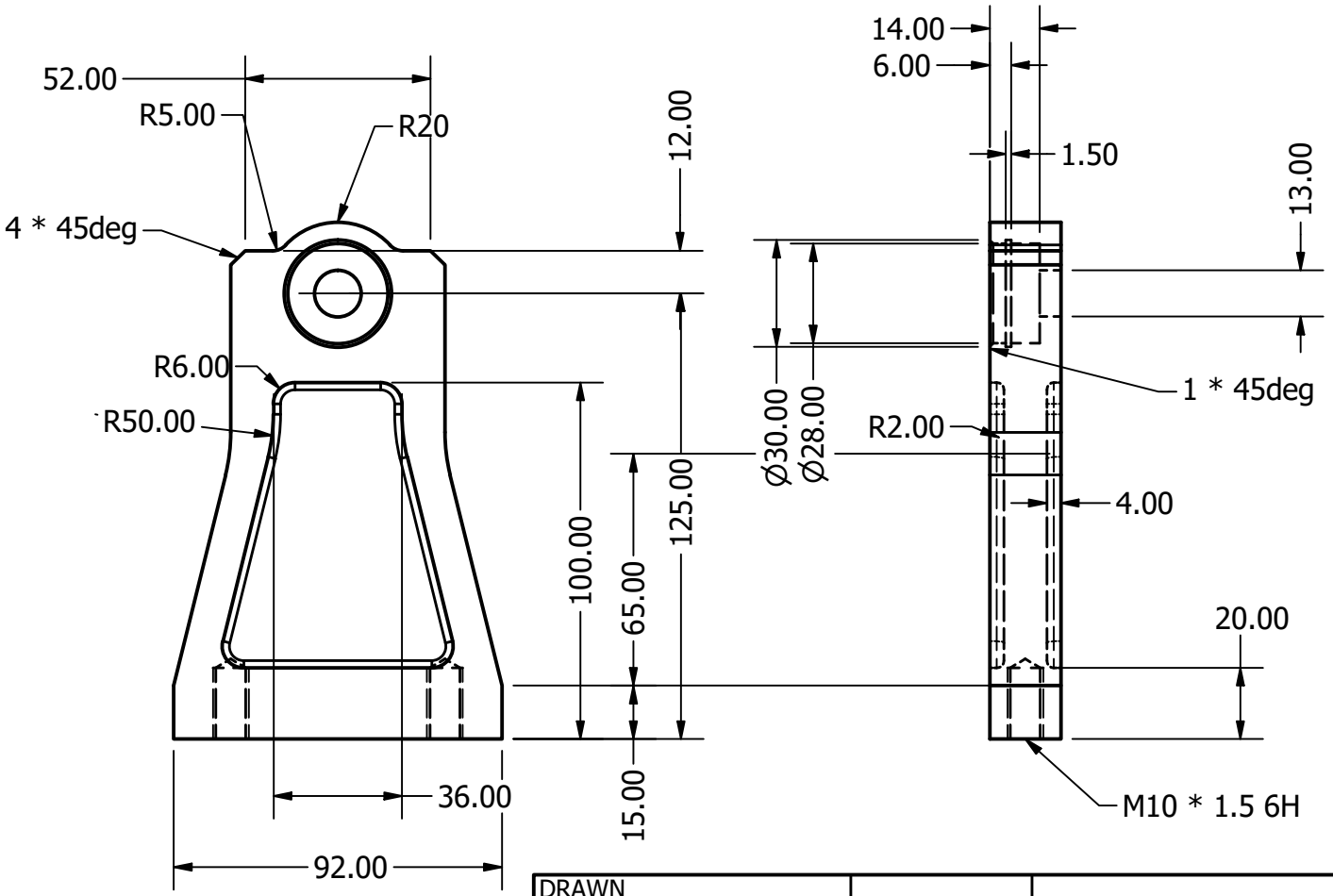

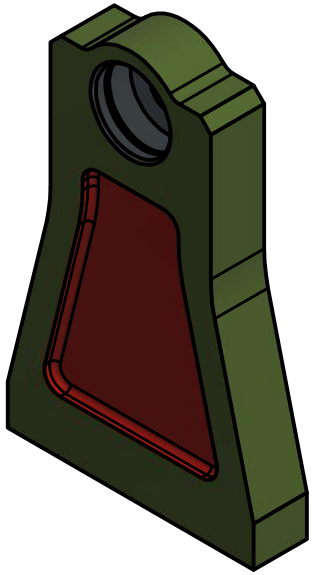

DRAWN BENNY S L	09/08/2020	VERZEO PROJECT HEV
CHECKED		TITLE
QA		
MFG		BEARING HOLDER
APPROVED		
		SIZE A4 / DWG NO Drawing1 / REV
		SCALE 1:2 / SHEET 1 OF 1