sensor

File: sensor.kicad_sch

Connectors

File: connectors.kicad_sch

Sheet: /
File: mmWave-Shield.kicad_sch

Title:

Size: A4	Date:	**Rev:**
KiCad E.D.A. 9.0.4		Id: 1/3

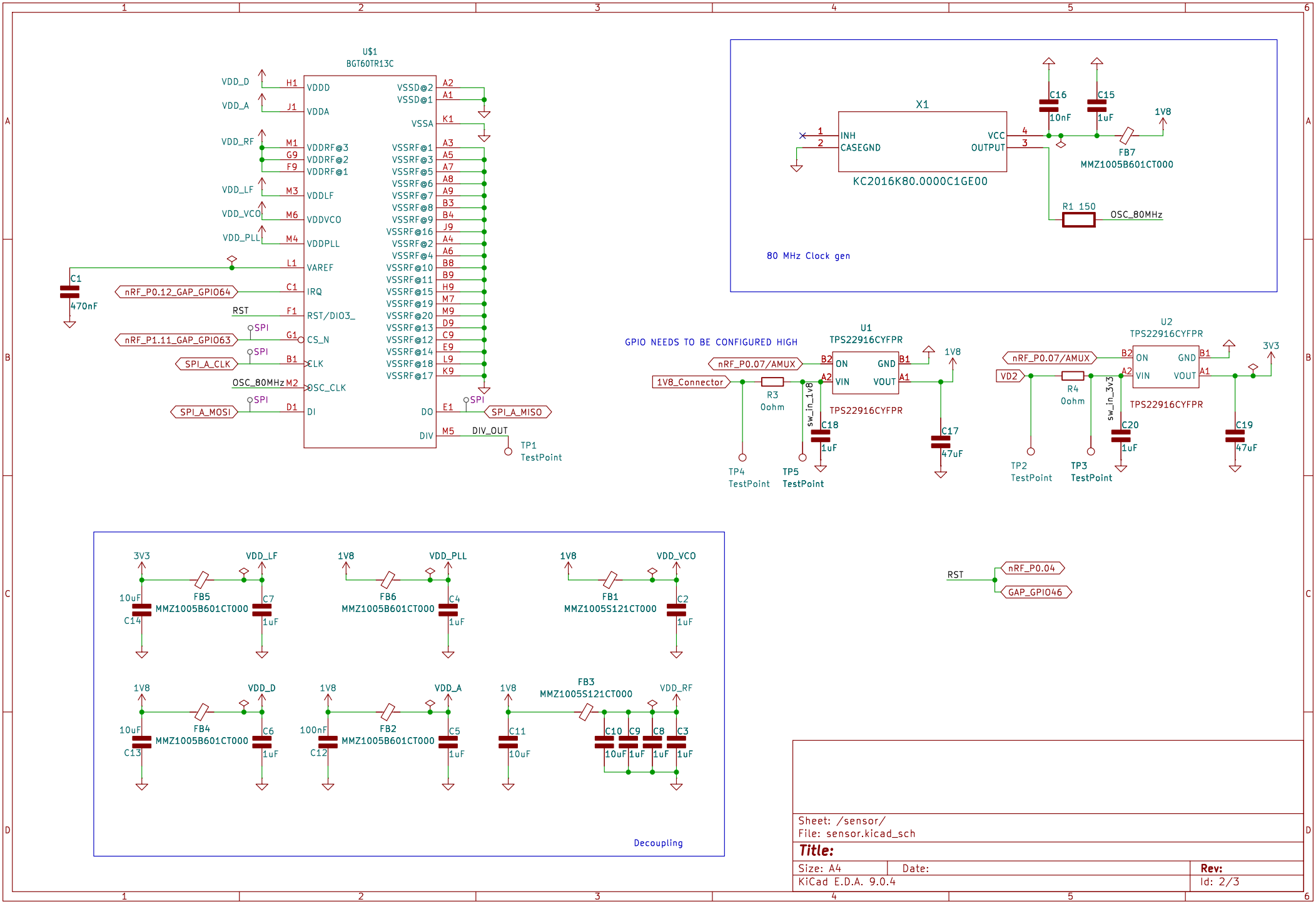
U$1
BGT60TR13C
VDD_D
VDD_A
VDD_RF
VDD_LF
VDD_VCO
VDD_PLL
VDDD
VDDA
VDDRF@3
VDDRF@2
VDDRF@1
VDDLF
VDDVCO
VDDPLL
VAREF
IRQ
RST/DIO3_
CS_N
CLK
OSC_CLK
DI
DO
DIV
VSSD@2
VSSD@1
VSSA
VSSRF@1
VSSRF@3
VSSRF@5
VSSRF@6
VSSRF@7
VSSRF@8
VSSRF@9
VSSRF@16
VSSRF@2
VSSRF@4
VSSRF@10
VSSRF@11
VSSRF@15
VSSRF@19
VSSRF@20
VSSRF@13
VSSRF@12
VSSRF@14
VSSRF@18
VSSRF@17
C1
470nF
nRF_P0.12_GAP_GPIO64
RST
nRF_P1.11_GAP_GPIO63
SPI_A_CLK
OSC_80MHz
SPI_A_MOSI
SPI_A_MISO
DIV_OUT
TP1
TestPoint
X1
INH
CASEGND
VCC
OUTPUT
KC2016K80.0000C1GE00
C16
10nF
C15
1uF
1V8
FB7
MMZ1005B601CT000
R1 150
OSC_80MHz
80 MHz Clock gen
GPIO NEEDS TO BE CONFIGURED HIGH
U1
TPS22916CYFPR
nRF_P0.07/AMUX
1V8_Connector
R3
0ohm
sw_in_1v8
ON
VIN
GND
VOUT
C18
1uF
C17
47uF
TP4
TestPoint
TP5
TestPoint
U2
TPS22916CYFPR
VD2
R4
0ohm
sw_in_3v3
3V3
C20
1uF
C19
47uF
TP2
TestPoint
TP3
TestPoint
RST
nRF_P0.04
GAP_GPIO46
FB5
MMZ1005B601CT000
C7
1uF
10uF
C14
FB6
MMZ1005B601CT000
C4
1uF
FB1
MMZ1005S121CT000
C2
1uF
FB4
MMZ1005B601CT000
C6
1uF
C13
FB2
MMZ1005B601CT000
C5
1uF
100nF
C12
FB3
MMZ1005S121CT000
C11
10uF
C10
C9
C8
C3
Decoupling
Sheet: /sensor/
File: sensor.kicad_sch
Title:
Size: A4
Date:
Rev:
KiCad E.D.A. 9.0.4
Id: 2/3

40-pin board-to-board connector (male)

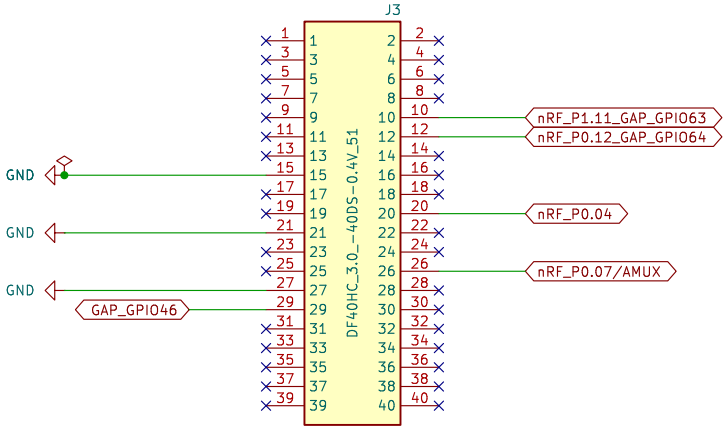

50-pin board-to-board connector (male)

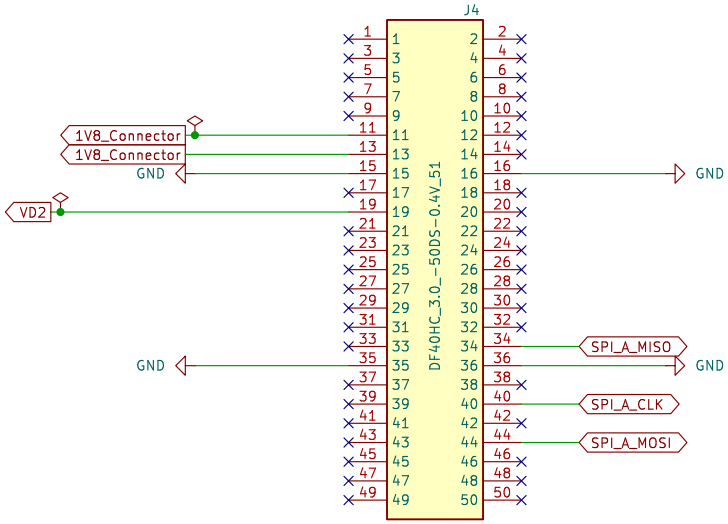

Double Check Footprint of Socket and Plug!
Different stacking heights are available!

Sheet: /Connectors/
File: connectors.kicad_sch

Title:

Size: A4	Date:	**Rev:**
KiCad E.D.A. 9.0.4		Id: 3/3