sensor

File: sensor.kicad_sch

Connectors

File: connectors.kicad_sch

Sheet: /
File: mmWave-Shield.kicad_sch

Title:

Size: A4	Date:	**Rev:**
KiCad E.D.A. 9.0.4		Id: 1/3

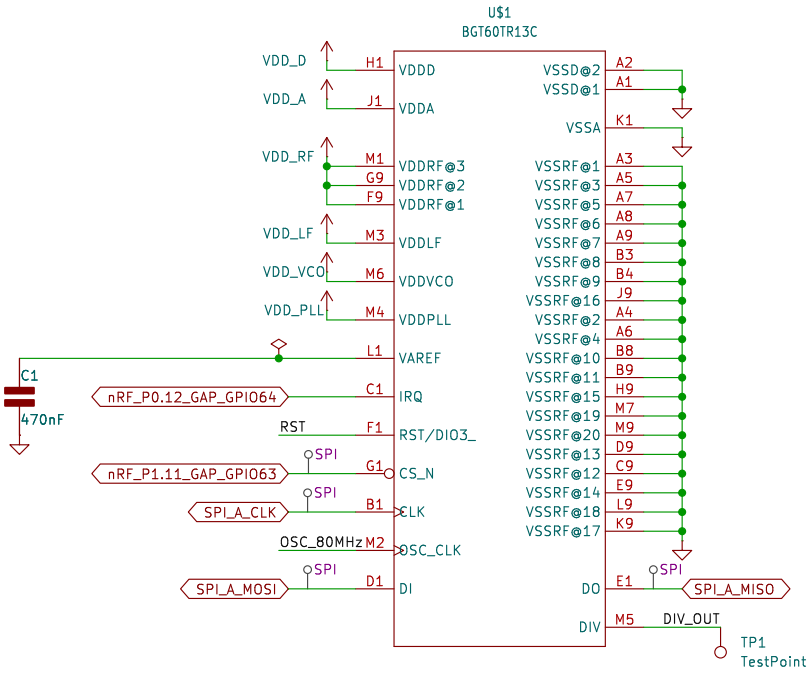

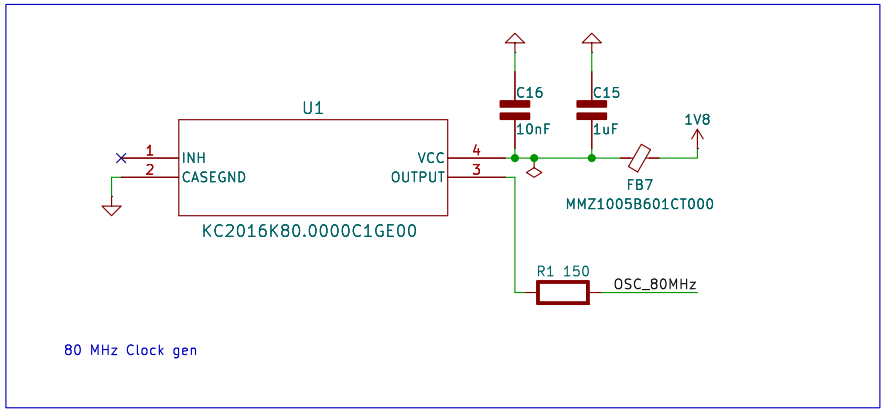

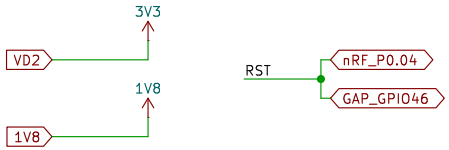

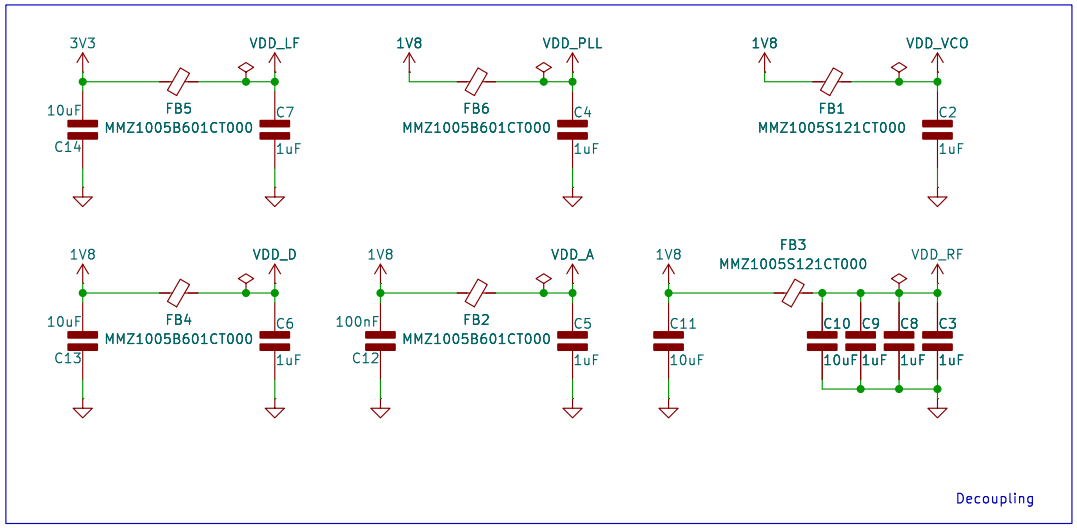

Sheet: /sensor/
File: sensor.kicad_sch

Title:

Size: A4	Date:	Rev:
KiCad E.D.A. 9.0.4		Id: 2/3

40-pin board-to-board connector (male)

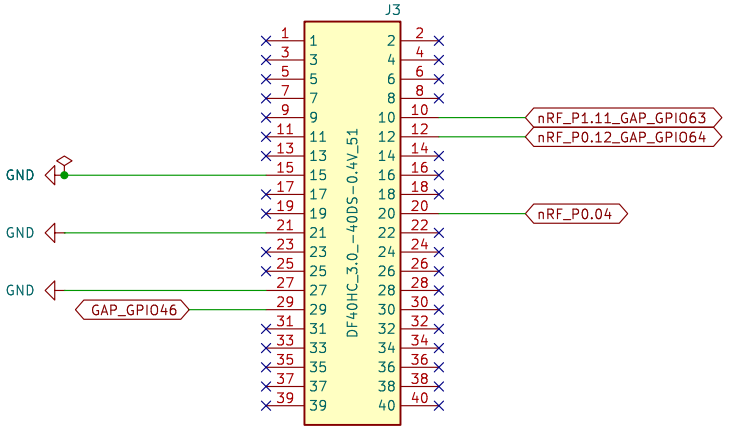

50-pin board-to-board connector (male)

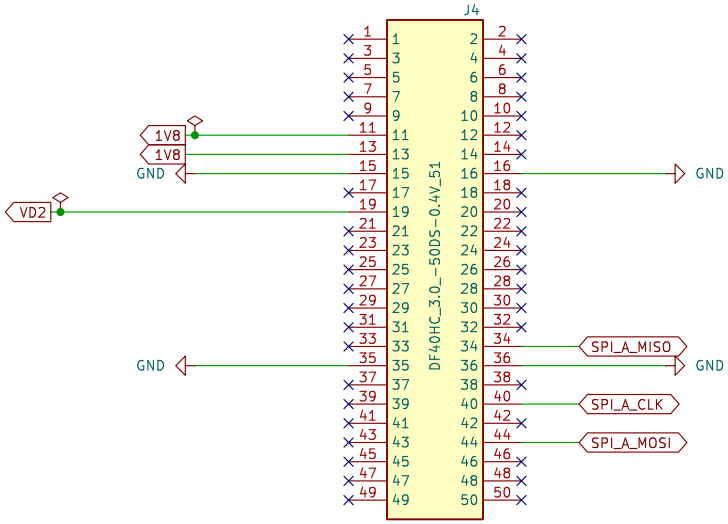

Double Check Footprint of Socket and Plug!
Different stacking heights are available!

Sheet: /Connectors/
File: connectors.kicad_sch

Title:

Size: A4	Date:	**Rev:**
KiCad E.D.A. 9.0.4		Id: 3/3