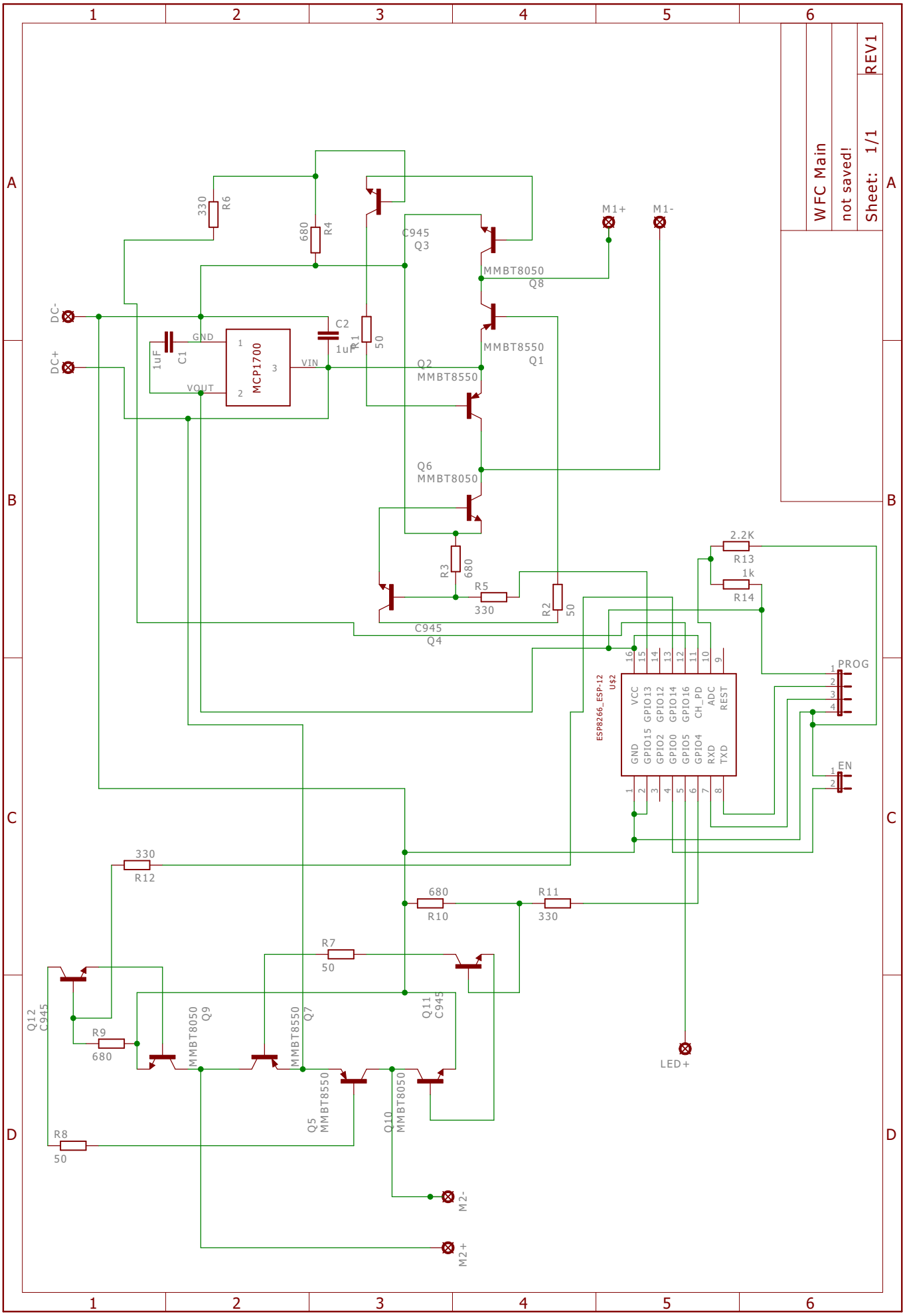

03/08/2015 12:50 C:\Users\Deception\Desktop\WFC Main.sch (Sheet: 1/1)