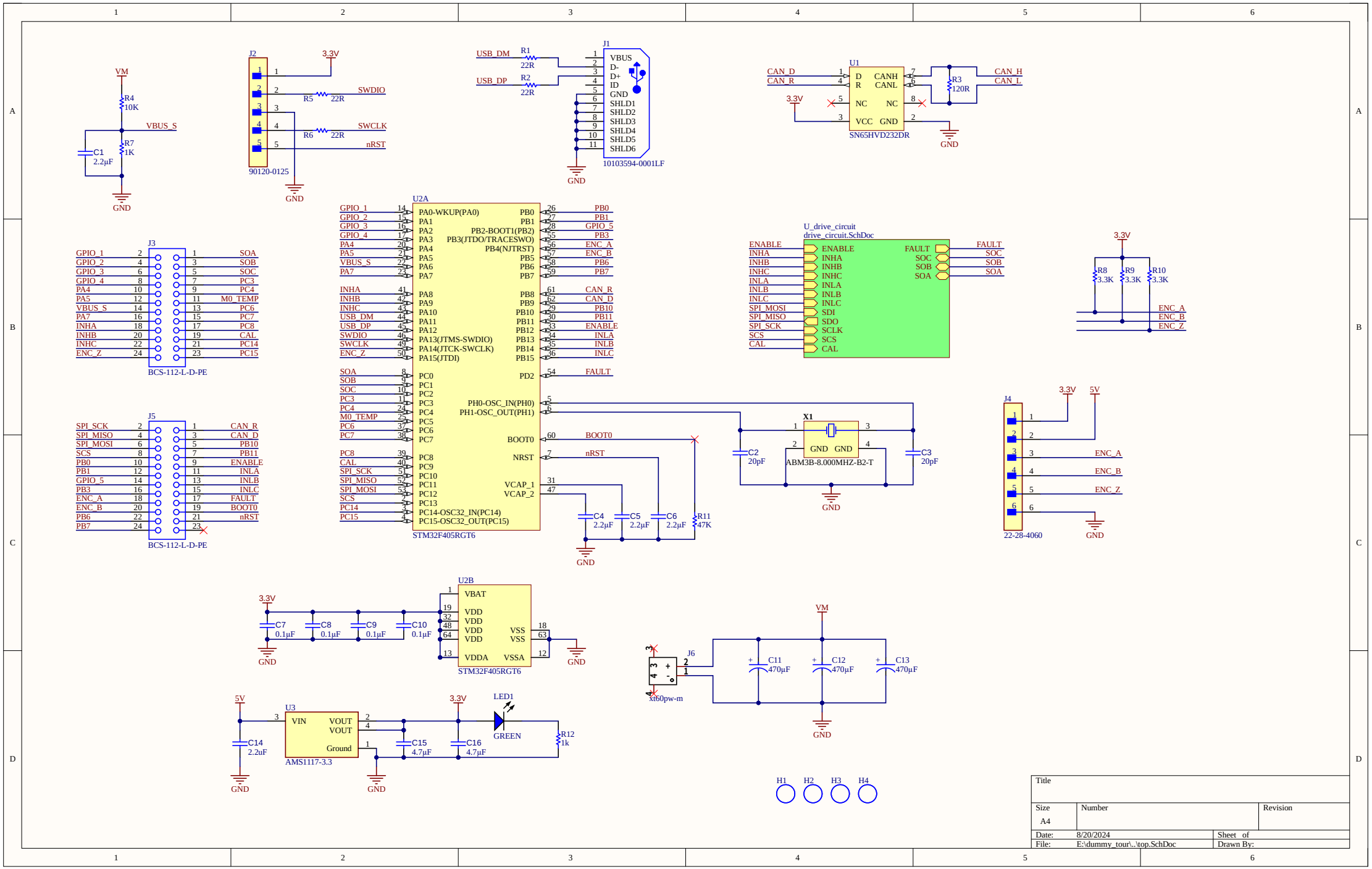
VM
R4
10K
VBUS_S
C1
2.2µF
R7
1K
GND
J2
90120-0125
3.3V
SWDIO
R5
22R
SWCLK
R6
22R
nRST
USB_DM
USB_DP
R1
22R
R2
22R
J1
VBUS
D-
D+
ID
GND
SHLD1
SHLD2
SHLD3
SHLD4
SHLD5
SHLD6
10103594-0001LF
U1
CAN_D
CAN_R
D
R
CANH
CANL
NC
VCC
GND
SN65HVD232DR
R3
120R
CAN_H
CAN_L
U2A
STM32F405RGT6
PA0-WKUP(PA0)
PB2-BOOT1(PB2)
PB3(JTDO/TRACESWO)
PB4(NJTRST)
PH0-OSC_IN(PH0)
PH1-OSC_OUT(PH1)
BOOT0
NRST
VCAP_1
VCAP_2
PC14-OSC32_IN(PC14)
PC15-OSC32_OUT(PC15)
GPIO_1
GPIO_2
GPIO_3
GPIO_4
INHA
INHB
INHC
USB_DM
USB_DP
SWDIO
SWCLK
ENC_Z
SOA
SOB
SOC
M0_TEMP
CAL
SPI_SCK
SPI_MISO
SPI_MOSI
SCS
PB0
PB1
PB3
PB6
PB7
PB10
PB11
ENABLE
FAULT
J3
BCS-112-L-D-PE
J5
U_drive_circuit
drive_circuit.SchDoc
SDI
SDO
X1
ABM3B-8.000MHZ-B2-T
C2
20pF
C3
20pF
C4
2.2µF
C5
2.2µF
C6
2.2µF
R11
47K
R8
3.3K
R9
3.3K
R10
3.3K
J4
22-28-4060
5V
U2B
VBAT
VDD
VDDA
VSS
VSSA
C7
0.1µF
C8
0.1µF
C9
0.1µF
C10
0.1µF
J6
xt60pw-m
C11
470µF
C12
470µF
C13
470µF
U3
VIN
VOUT
Ground
AMS1117-3.3
C14
2.2uF
C15
4.7µF
C16
4.7µF
LED1
GREEN
R12
1k
H1
H2
H3
H4
Title
Size
A4
Number
Revision
Date:
8/20/2024
Sheet of
File:
E:\dummy_tour\..\top.SchDoc
Drawn By:

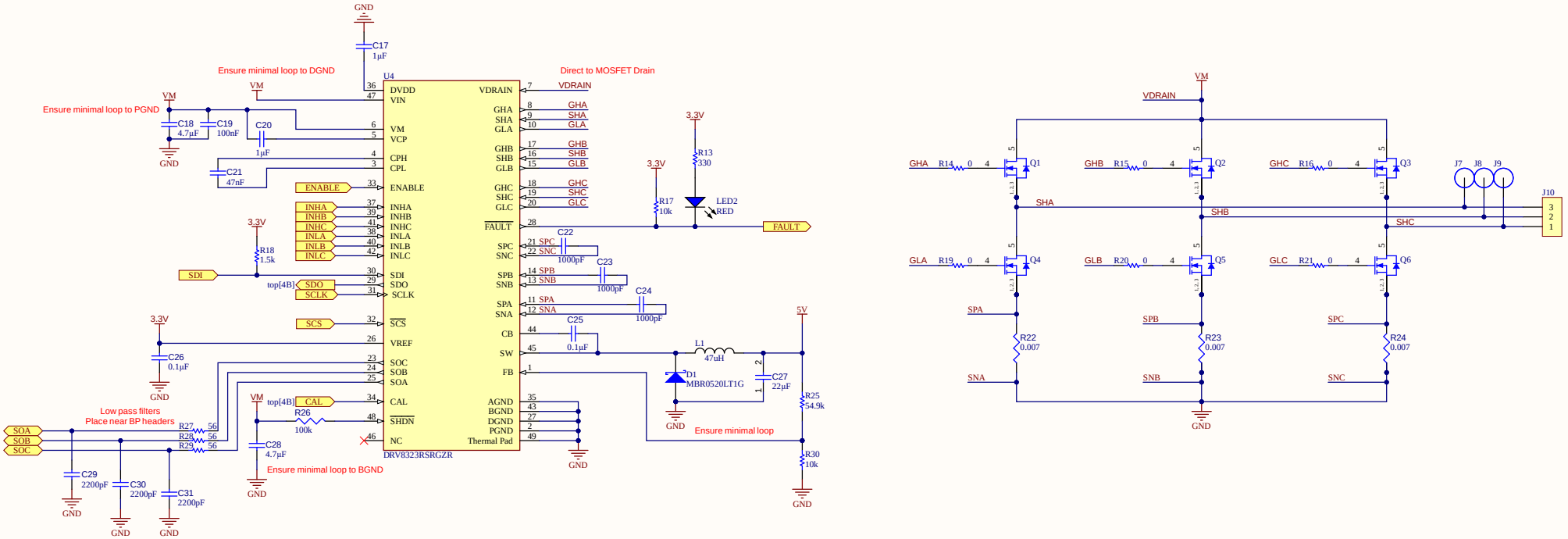

Title		
Size A4	Number	Revision
Date: 8/20/2024		Sheet of
File: E:\dummy_tour\..\drive_circuit.SchDoc		Drawn By: